Tender No. HORC/HRIDC/SYS-1/2023

Attachment 10

to

Corrigendum No. 2

Part 2, Section VII-3

Employer's Requirements, Tender Drawings/R1

Section VII-8: Tender Drawings/R1

Tenderer shall download Tender drawings from HRIDC website. Tender Drawings are available for downloading under Active Tender Section on HRIDC website (https://hridc.co.in/active-tender.php). Tender drawings uploaded on HRIDC website for Package SYS-1 shall be deemed to form part of Corrigendum No. 2. List of Tender Drawings are enclosed hereunder.

List of Tender Drawings

	-Black colour shows Tender drawings which have not been revised
	-Blue colour shows Tender drawings which have been revised
	-Red colour shows New additional Tender drawings

A. Electrical Drawings

SN	Description	Drawing No.
1	Indicative General Power Supply Diagram	GC-HRIDC-SYS1-DRW-ELE-001_A1
2	Indicative OHE System for Open Route on Tangent Track	GC-HRIDC-SYS1-DRW-ELE-002_A1
3	Indicative OHE System for Open Route on Curved Track	GC-HRIDC-SYS1-DRW-ELE-003_A1
4	Indicative Typical Arrangement of Portal and Earthing of OHE Structure and Rails	GC-HRIDC-SYS1-DRW-ELE-004_A0
5	Indicative Typical Arrangement of BEC with OHE Structure and Rails	GC-HRIDC-SYS1-DRW-ELE-005_A0
6	Indicative OHE, Earthing & Bonding Arrangement on RCC Bridge/ Viaduct	GC-HRIDC-SYS1-DRW-ELE-006_A0
7	Indicative OHE Guy Rod Arrangement on Steel Bridge/ Viaduct	GC-HRIDC-SYS1-DRW-ELE-007_A0
8	Indicative Typical Sectioning Arrangement of Station	GC-HRIDC-SYS1-DRW-ELE-008_A1
9	Indicative OHE Mast on Girder Bridge with Earthing	GC-HRIDC-SYS1-DRW-ELE-009_A1
10	Indicative Earthing & Bonding of OHE Structure along the Bridge, Girders (RCC) & Piers	GC-HRIDC-SYS1-DRW-ELE-010_A0
11	Indicative 2x25 kV High Rise ROCS in Tunnel	GC-HRIDC-SYS1-DRW-ELE-011_A1
12	Indicative Single Line Diagram of Traction Substation 220/132/2x25kV Scott Connected Transformer	GC-HRIDC-SYS1-DRW-ELE-012_A0
13	Indicative Control Room Building at TSS	GC-HRIDC-SYS1-DRW-ELE-013_A1
14	Indicative Single Line Diagram of Sectioning Post(SP)	GC-HRIDC-SYS1-DRW-ELE-014_A1
15	Indicative Single Line Diagram of Sub-Sectioning Post(SSP)	GC-HRIDC-SYS1-DRW-ELE-015_A1

16	Indicative Control Room Building for SP& SSP	GC-HRIDC-SYS1-DRW-ELE-016_A1
17	Indicative Drawing for TSS/SP/ SSP Fencing	GC-HRIDC-SYS1-DRW-ELE-017_A1
18	Indicative General Arrangement Block Diagram for Traction SCADA Control	GC-HRIDC-SYS1-DRW-ELE-018_A1
19	Indicative General Arrangement Block Diagram for Auxiliary SCADA Control	GC-HRIDC-SYS1-DRW-ELE-019_A0
20	Indicative Plan and Elevation for Tower Wagon Shed	GC-HRIDC-SYS1-DRW-ELE-020_A1
21	Indicative Cable Route Plan for Motorised Isolator	GC-HRIDC-SYS1-DRW-ELE-021_A0
22	Indicative Traction Line Diagram	GC-HRIDC-SYS1-DRW-ELE-022_A0
23	Indicative portal arrangement in Maneasr station yard and Manesar – Patli open route	GC-HRIDC-SYS1-DRW-ELE-023_A0

B. Civil Drawings

SN	Description	Drawing No.
1	Conceptual Plan & Longitudinal Section (– 2.12 km to - 0.6 km)	GC-HRIDC-ALL-DRW-ALN-P&P-(-2.12)- (-0.6) KM_A0
2	Conceptual Plan & Longitudinal Section (- 0.6 km to 0 km)	GC-HRIDC-ALL-DRW-ALN-P&P-(-0.6)-0 KM-A0
3	Conceptual Plan & Longitudinal Section (0 km to 5 km)	GC-HRIDC-ALL-DRW-ALN-P&P-0-5 KM_A0
4	Conceptual Plan & Longitudinal Section (5 km to 10 km)	GC-HRIDC-ALL-DRW-ALN-P&P-5-10 KM_A0
5	Conceptual Plan & Longitudinal Section {10 km to 15 km (Tunnel)}	GC-HRIDC-ALL-DRW-ALN-P&P-10-15 KM_A2
6	Conceptual Plan & Longitudinal Section (15 km to 20 km)	GC-HRIDC-ALL-DRW-ALN-P&P-15-20 KM_A2
7	Conceptual Plan & Longitudinal Section (20 km to 25 km)	GC-HRIDC-ALL-DRW-ALN-P&P-20-25 KM_A0
8	Conceptual Plan & Longitudinal Section {24 km to 30 km (Tunnel)}	GC-HRIDC-ALL-DRW-ALN-P&P-24-30 KM_A0
9	Conceptual Plan & Longitudinal Section 29 km to 33 km	GC-HRIDC-ALL-DRW-ALN-P&P-29-33 KM_A1
10	Conceptual Plan & Longitudinal Section (33 km to 35 km)	GC-HRIDC-ALL-DRW-ALN-P&P-33-35 KM_A1
11	Conceptual Plan & Longitudinal Section (35 km to 40 km)	GC-HRIDC-ALL-DRW-ALN-P&P-35-40 KM_A1
12	Conceptual Plan & Longitudinal Section (40 km to 45 km)	GC-HRIDC-ALL-DRW-ALN-P&P-40-45 KM_A1

SN	Description	Drawing No.
13	Conceptual Plan & Longitudinal Section (45 km to 50 km)	GC-HRIDC-ALL-DRW-ALN-P&P-45-50 KM_A1
14	Conceptual Plan & Longitudinal Section (49.7 km to 55.6 km) (Main Line)	HRIDC/PS/LS-1
15	Conceptual Plan & Longitudinal Section (55 km to 61.5 km)	GC-HRIDC-ALL-DRW-ALN-P&P-55-61.5 KM_A1
16	Plan & Longitudinal Section (60 km to 65 km)	AA/2245/AL/DR/P&P/R3
17	Plan & Longitudinal Section (65 km to 70 km)	AA/2245/AL/DR/P&P/R3
18	Plan & Longitudinal Section (70 km to 75 km)	AA/2245/AL/DR/P&P/R3
19	Plan & Longitudinal Section (75 km to 80 km)	AA/2245/AL/DR/P&P/R3
20	Plan & Longitudinal Section (80 km to 85 km)	AA/2245/AL/DR/P&P/R3
21	Plan & Longitudinal Section (85 km to 90 km)	AA/2245/AL/DR/P&P/R3
22	Plan & Longitudinal Section (90 km to 95 km)	AA/2245/AL/DR/P&P/R3
23	Plan & Longitudinal Section (95 km to 100 km)	AA/2245/AL/DR/P&P/R3
24	Plan & Longitudinal Section (100 km to 105 km)	AA/2245/AL/DR/P&P/R3
25	Plan & Longitudinal Section (105 km to 110 km)	AA/2245/AL/DR/P&P/R3
26	Plan & Longitudinal Section (110 km to 115 km)	AA/2245/AL/DR/P&P/R3
27	Plan & Longitudinal Section (115 km to 120 km)	AA/2245/AL/DR/P&P/R3
28	Plan & Longitudinal Section (120 km to 125 km)	AA/2245/AL/DR/P&P/R3
29	Plan & Longitudinal Section (125 km to 126 km)	AA/2245/AL/DR/P&P/R3
30	Detailed Plan and Longitudinal Section from Chainage (0 km to 5.72 km (Connectivity Line)	HRIDC/PS/LS-2
31	Conceptual Plan & Longitudinal Section Connectivity Towards Patli	GC-HRIDC-C2-DRW-ALN-P&P-03001_A2
32	Conceptual Plan & Longitudinal Section Connectivity Towards Sultanpur	GC-HRIDC-C2-DRW-ALN-P&P-04001_A2
33	Conceptual Plan & Longitudinal Section Connectivity Towards Sultanpur from Badsa	GC-HRIDC-C2-DRW-ALN-P&P-05001_A0

SN	Description	Drawing No.
34	Conceptual Plan & Longitudinal Section Mandothi to Asaudah Connectivity	AA/2245/AL/DR/P&P/R3
35	Re-Grading of Garhi Harsaru-Farukhnagar Main Line of Sultanpur Station Yard (Conceptual)	GC-AA/RLY/2245/HRIDC/ESP-07/REV-03
36	Conceptual Plan Typical Embankment/ Cutting Profile	GC-HRIDC-SK-GEN-001_A2
37	Conceptual Engineering Scale Plan of Prithla Junction Yard CH: 00.00m from Pritla	GC-HRIDC-C5-DRW-STN-ESP-PRI01_A0
38	Conceptual Engineering Scale Plan Silani Station Yard CH: 10341.882m from Prithla	GC-HRIDC-C5-DRW-STN-ESP-SIL01_A0
39	Conceptual Engineering Scale Plan of IMT Sohna	GC-HRIDC-C5-DRW-STN-ESP-SOH01_A0
40	Conceptual Engineering Scale Plan of Dhulawat station CH:32767m F/from Prithala	GC-HRIDC-C23-DRW-STN-ESP-DHU01_A1
41	Conceptual Engineering Scale Plan of Chandla Dungerwas Station Yard CH:42606.159m F/Prithala	GC-HRIDC-C23-DRW-STN-ESP-CDU01_A2
42	Conceptual Engineering Scale Plan of Panchgaon Station Yard CH:46279.352m from Prithala	GC-HRIDC-C23-DRW-STN-ESP-PCG01_A2
43	Conceptual Engineering Scale Plan of Manesar Station	GC-HRIDC-C1-DRW-STN-ESP-MAN01_A1
44	Conceptual Engineering Scale Plan of New Patli Junction CH: 58135.513m	GC-HRIDC-C23-DRW-STN-ESP-NPA01_A3
45	Conceptual Engineering Scale Plan of Badsa Junction CH:64742.718m from Prithala	GC-HRIDC-C6-DRW-STN-ESP-BDS01_A0
46	Conceptual Engineering Scale Plan of Deverkhana Station Yard CH: 71098.961m from Prithala	GC-HRIDC-C6-DRW-STN-ESP-DEV01_A0
47	Conceptual Engineering Scale Plan of Badli Crossing Station Yard CH: 76829.080m from Prithala	GC-HRIDC-C6-DRW-STN-ESP-BDL01_A0
48	Conceptual Engineering Scale Plan of Mandothi Station Yard CH: 90449.137m from Prithala	GC-HRIDC-C6-DRW-STN-ESP-MAN01_A0
49	Conceptual Engineering Scale Plan of New Asaudah Station CH:94031.161m from Prithala	GC-HRIDC-C6-DRW-STN-ESP-NAS01_A0
50.	Conceptual Engineering Scale Plan of Jasaur Kheri Station Yard CH 100228.880m from Prithala	GC-HRIDC-C6-DRW-STN-ESP-JSK01_A0

SN	Description	Drawing No.
51	Conceptual Engineering Scale Plan of Kharkhoda Kirholi Station Yard CH: 108728.865m from Prithala	GC-HRIDC-C6-DRW-STN-ESP-KHR01_A0
52	Conceptual Engineering Scale Plan of Tarakpur Crossing Station Yard CH: 114218.885m from Prithala	GC-HRIDC-C6-DRW-STN-ESP-TAR01_A0
53	Conceptual Engineering Scale Plan of New Harsana Kalan Junction CH 125091.992m from Prithala	AA/RLY/2245/HRIDC/ESP-17/REV-5
54	Conceptual Engineering Scale Plan DFC New Prithla yard	GC-HRIDC-C5-DRW-STN-ESP-NPR01_A0
55	ESP of Patli Station	GC-HRIDC-C2-DRW-ALN-ESP-001_A0
56	Conceptual Engineering Scale Plan of Asaudah	GC-HRIDC-C6-DRW-STN-ESP-IRA01_A0
57	Conceptual Engineering Scale Plan of Sultanpur Kaliawas Junction CH 36774.74m from Badsa KM:6/375	GC-HRIDC-C2-DRW-ALN-ESP-003_A0
58	Conceptual Drawing for single track tunnel cross section (ROCK)	GC-HRIDC-C4-DRW-TTL-CLT-01001_A1
59	Conceptual Drawing for single track tunnel cross section (SOIL)	GC-HRIDC-C4-DRW-TTL-CLT-01002_A1
60	Conceptual General Arrangement Drawing for Viaduct BR.NO.70	GC-HRIDC-C5-DRG-BRD-GAD-01070_A0
61	Conceptual plan for location of OHE mast for Composite Girder Bridges	GC-HRIDC-SK-GEN-031
62	Conceptual plan for location of the OHE mast in viaduct	GC-HRIDC-SK-GEN-032
63	General Arrangement Drawing of Proposed Major bridge (RFO) No.277 AT CH : 94381.195m 3x30.5m Open Web Girder (Crossing Railway on Delhi – Rohtak Section)	GC-HRIDC-C6-DRW-BRD-GAD-01277_A0
64	Conceptual Plan of OHE Portal for OWG Girder	GC-HRIDC-SK-GEN-036

Note: Section VII-8: Tender Drawings/R1 are available for downloading under Active Tender Section on HRIDC website (https://hridc.co.in/active-tender.php).

A. Electrical Drawings

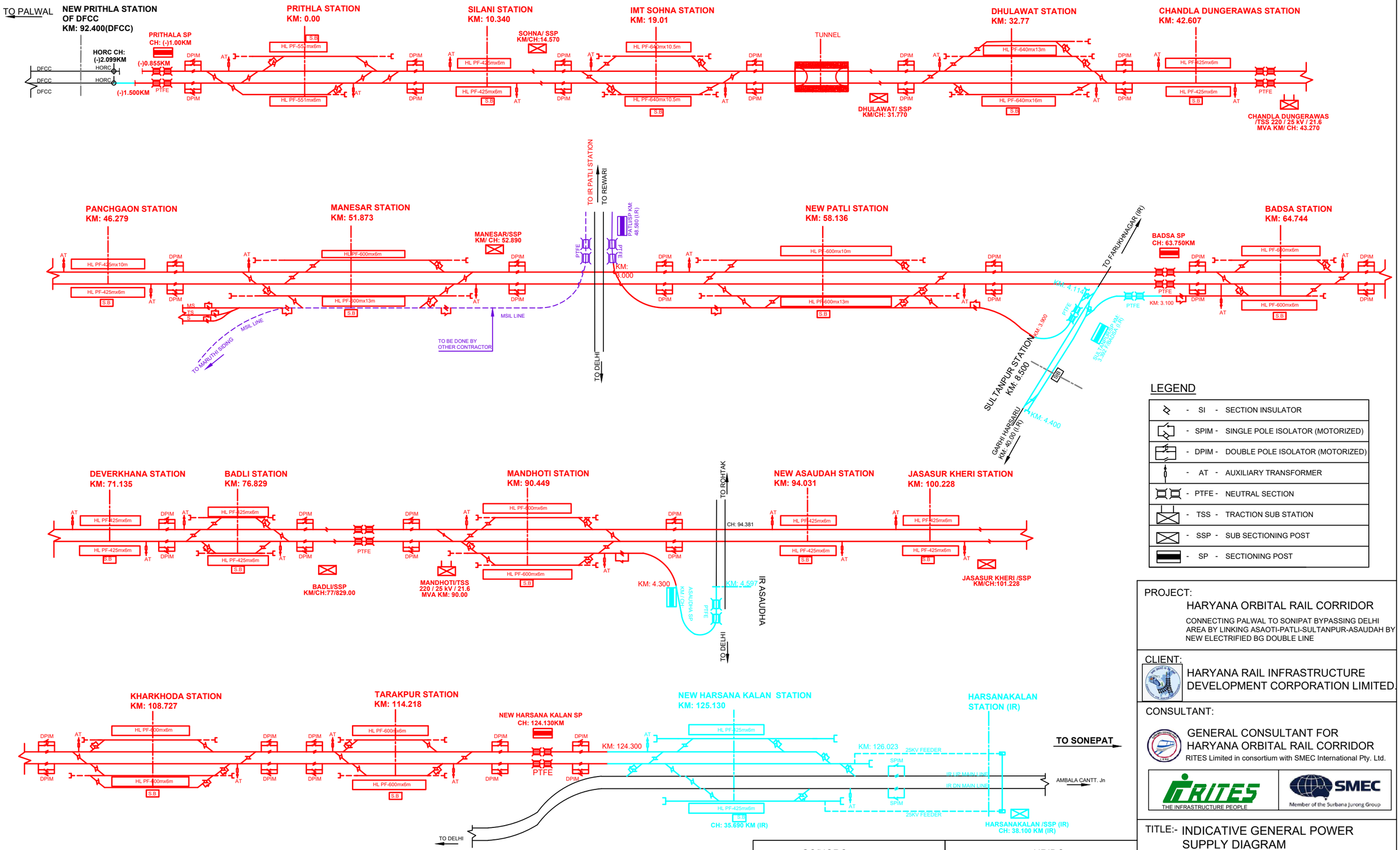

LEGEND

-	SI	-	SECTION INSULATOR
-	SPIM	-	SINGLE POLE ISOLATOR (MOTORIZED)
-	DPIM	-	DOUBLE POLE ISOLATOR (MOTORIZED)
-	AT	-	AUXILIARY TRANSFORMER
-	PTFE	-	NEUTRAL SECTION
-	TSS	-	TRACTION SUB STATION
-	SSP	-	SUB SECTIONING POST
-	SP	-	SECTIONING POST

PROJECT:

HARYANA ORBITAL RAIL CORRIDOR

CONNECTING PALWAL TO SONIPAT BYPASSING DELHI AREA BY LINKING ASAOTI-PATLI-SULTANPUR-ASAUDAH BY NEW ELECTRIFIED BG DOUBLE LINE

CLIENT:

HARYANA RAIL INFRASTRUCTURE DEVELOPMENT CORPORATION LIMITED.

CONSULTANT:

GENERAL CONSULTANT FOR HARYANA ORBITAL RAIL CORRIDOR

RITES Limited in consortium with SMEC International Pty. Ltd.

RITES THE INFRASTRUCTURE PEOPLE | SMEC Member of the Surbana Jurong Group

TITLE:- INDICATIVE GENERAL POWER SUPPLY DIAGRAM

GC/HORC		HRIDC	
NAME / DESIGNATION	SIGN	NAME / DESIGNATION	SIGN
CHAHATEY RAM PD		VIKRAM YADAV GM/ A&IE/ HRIDC	
A.S. JANGHU CRE/Elect.		JYOTI SANGWAN DGM/ Elect.	
STIPHEN SAHOO SRE/Elect.			

DRG. NO.	SHEET NO.	
GC-HRIDC-SYS1-DRW-ELE-001_A1		
SCALE :	ISSUE DATE	REVISED DATE
AS SHOWN	31.03.2023	08.07.2023

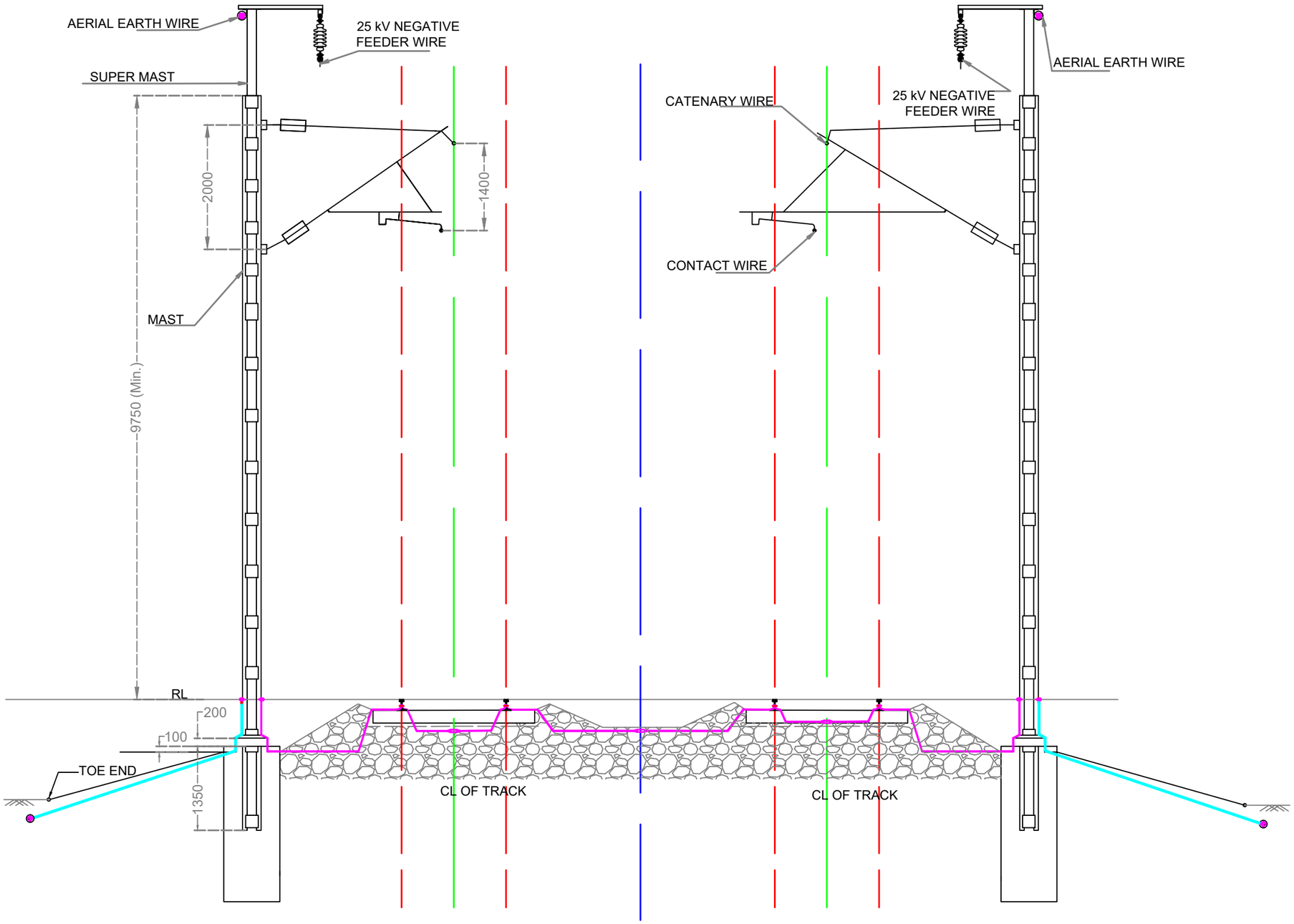

LEGEND

RAILS	
TRACK CENTRE	
TRACK TO TRACK CENTRE	
50x6 mm GI FLAT	
20mm DIA G.S.	

PROJECT:
HARYANA ORBITAL RAIL CORRIDOR
CONNECTING PALWAL TO SONIPAT BYPASSING DELHI AREA BY LINKING ASAOTI-PATLI-SULTANPUR-ASAUDAH BY NEW ELECTRIFIED BG DOUBLE LINE

CLIENT:
HARYANA RAIL INFRASTRUCTURE DEVELOPMENT CORPORATION LIMITED.

CONSULTANT:
GENERAL CONSULTANT FOR HARYANA ORBITAL RAIL CORRIDOR
RITES Limited in consortium with SMEC International Pty. Ltd.

RITES THE INFRASTRUCTURE PEOPLE | SMEC Member of the Surbana Jurong Group

TITLE:- INDICATIVE OHE SYSTEM FOR OPEN ROUTE ON TANGENT TRACK

GC/HORC		HRIDC	
NAME / DESIGNATION	SIGN	NAME / DESIGNATION	SIGN
CHAHATEY RAM PD		VIKRAM YADAV GM/ A&IE/ HRIDC	
A.S. JANGHU CRE/Elect.		JYOTI SANGWAN DGM/ Elect.	
STIPHEN SAHOO SRE/Elect.			

DRG. NO.	SHEET NO.
GC-HRIDC-SYS1-DRW-ELE-002_A1	

SCALE :	ISSUE DATE	REVISED DATE
AS SHOWN	31.03.2023	08.07.2023

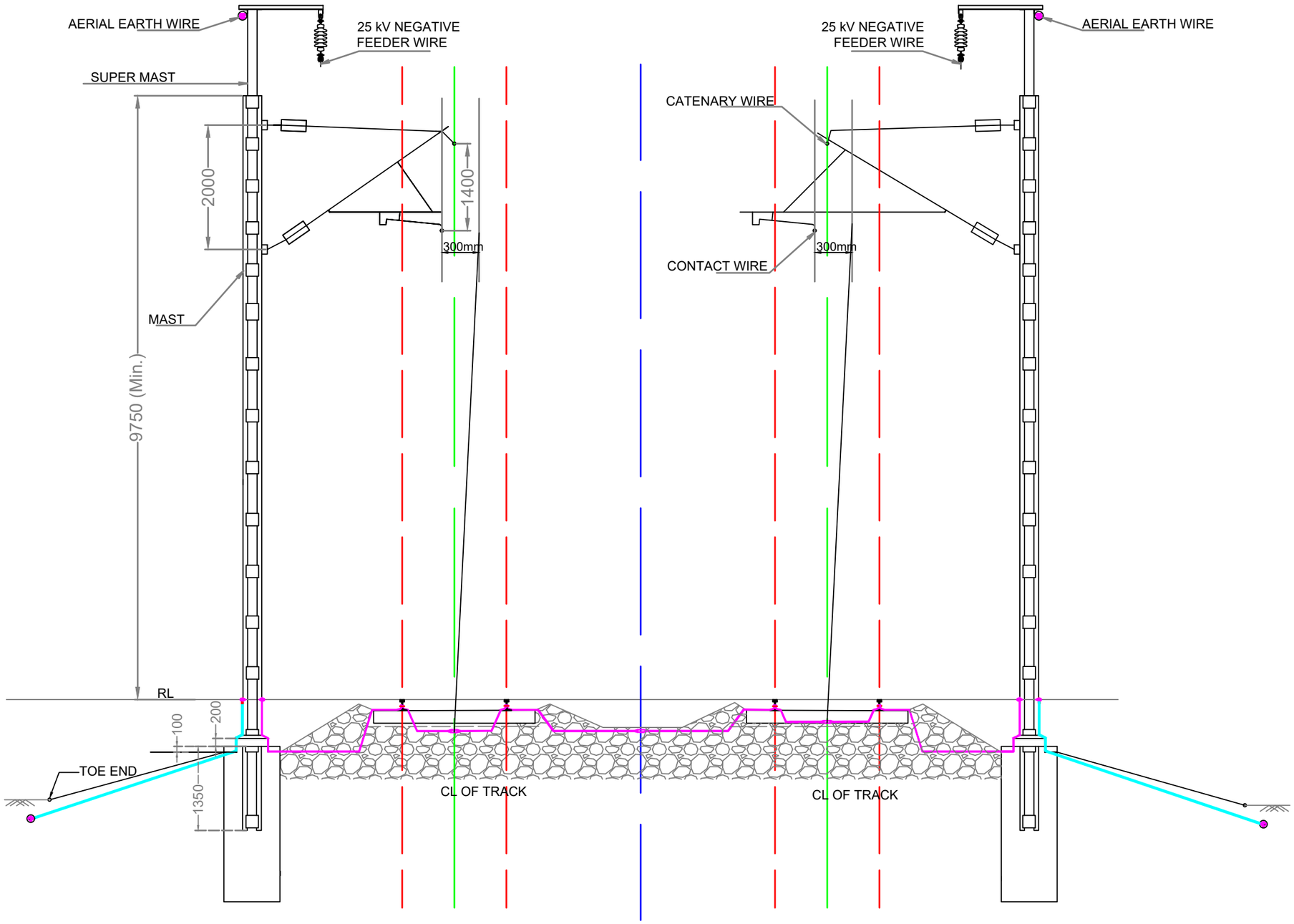

LEGEND

RAILS	
TRACK CENTRE	
TRACK TO TRACK CENTRE	
50x6 mm MS FLAT	
20mm DIA G.S. STRANDED WIRE	

PROJECT:

HARYANA ORBITAL RAIL CORRIDOR

CONNECTING PALWAL TO SONIPAT BYPASSING DELHI AREA BY LINKING ASAOTI-PATLI-SULTANPUR-ASAUDAH BY NEW ELECTRIFIED BG DOUBLE LINE

CLIENT:

HARYANA RAIL INFRASTRUCTURE DEVELOPMENT CORPORATION LIMITED.

CONSULTANT:

GENERAL CONSULTANT FOR HARYANA ORBITAL RAIL CORRIDOR

RITES Limited in consortium with SMEC International Pty. Ltd.

RITES THE INFRASTRUCTURE PEOPLE | SMEC Member of the Surbana Jurong Group

TITLE:- INDICATIVE OHE SYSTEM FOR OPEN ROUTE ON CURVED TRACK

GC/HORC		HRIDC	
NAME / DESIGNATION	SIGN	NAME / DESIGNATION	SIGN
CHAHATEY RAM PD		VIKRAM YADAV GM/ A&IE/ HRIDC	
A.S. JANGHU CRE/Elect.		JYOTI SANGWAN DGM/ Elect.	
STIPHEN SAHOO SRE/Elect.			

DRG. NO.	SHEET NO.
GC-HRIDC-SYS1-DRW-ELE-003_A1	

SCALE :	ISSUE DATE	REVISED DATE
AS SHOWN	31.03.2023	08.07.2023

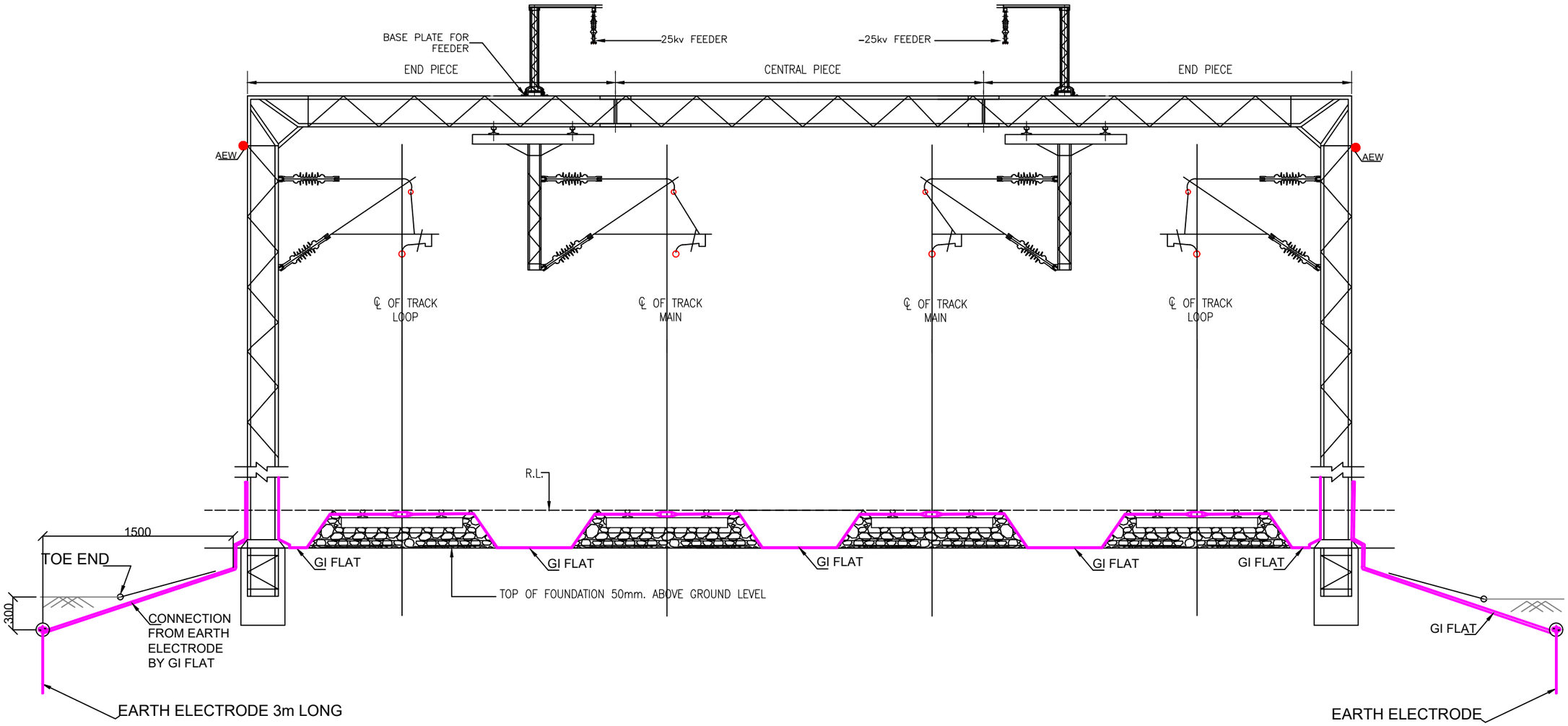

NOTE:

1. THE INTERCONNECTION OF EARTH ELECTRODE, MAST/ PORTAL, RUNNING RAILS, MAST/ PORTAL, EARTH ELECTRODE, SHALL BE MADE AT REGULAR INTERVALS BASED ON RESULTS OF SIMULATION STUDY BUT INTERCONNECTION INTERVAL SHALL NOT EXCEED 400m.

GC/HORC		HRIDC	
NAME / DESIGNATION	SIGN	NAME / DESIGNATION	SIGN
CHAHATEY RAM PD		VIKRAM YADAV GM/ A&IE/ HRIDC	
A.S. JANGHU CRE/Elect.		JYOTI SANGWAN DGM/ Elect.	
STIPHEN SAHOO SRE/Elect.			

PROJECT:
HARYANA ORBITAL RAIL CORRIDOR
CONNECTING PALWAL TO SONIPAT BYPASSING DELHI AREA BY LINKING ASAOTI-PATLI-SULTANPUR-ASAUDAH BY NEW ELECTRIFIED BG DOUBLE LINE

CLIENT:
HARYANA RAIL INFRASTRUCTURE DEVELOPMENT CORPORATION LIMITED.

CONSULTANT:
GENERAL CONSULTANT FOR HARYANA ORBITAL RAIL CORRIDOR
RITES Limited in consortium with SMEC International Pty. Ltd.
RITES THE INFRASTRUCTURE PEOPLE
SMEC Member of the Surbana Jurong Group

TITLE:- INDICATIVE TYPICAL ARRANGEMENT OF PORTAL AND EARTHING OF OHE STRUCTURE AND RAILS

DRG. NO.	SHEET NO.
GC-HRIDC-SYS1-DRW-ELE-004_A0	

SCALE :	ISSUE DATE	REVISED DATE
AS SHOWN	31.03.2023	

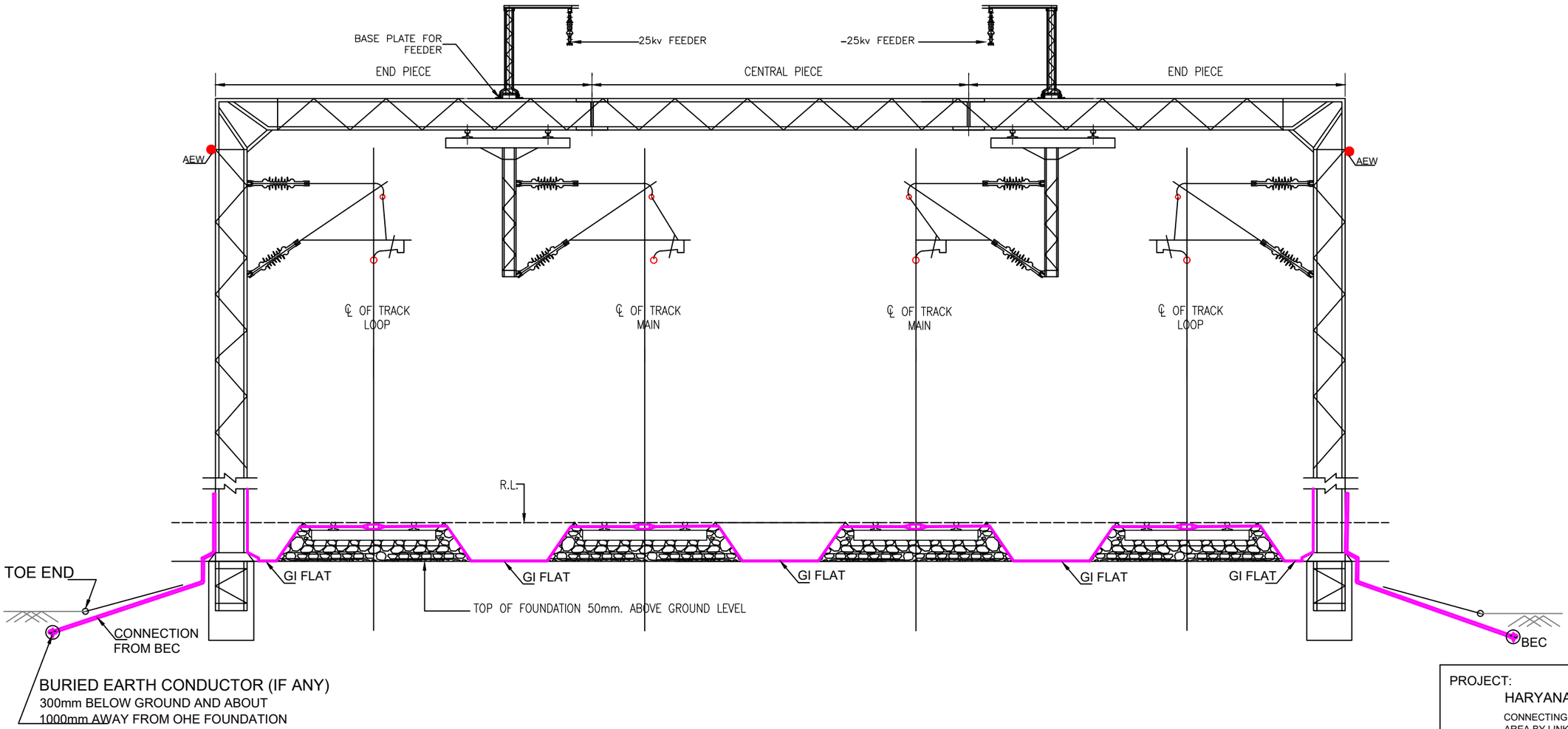

NOTE:

1. BURIED EARTH CONDUCTOR SHALL BE PROVIDED BASED ON RESULTS OF SIMULATION STUDY.
2. THE INTERCONNECTION OF BEC, MAST/ PORTAL, RUNNING RAILS, MAST/ PORTAL, BEC SHALL BE MADE AT REGULAR INTERVALS BASED ON RESULTS OF SIMULATION STUDY.

GC/HORC		HRIDC	
NAME / DESIGNATION	SIGN	NAME / DESIGNATION	SIGN
CHAHATEY RAM PD		VIKRAM YADAV GM/ A&IE/ HRIDC	
A.S. JANGHU CRE/Elect.		JYOTI SANGWAN DGM/ Elect.	
STIPHEN SAHOO SRE/Elect.			

PROJECT:
HARYANA ORBITAL RAIL CORRIDOR
CONNECTING PALWAL TO SONIPAT BYPASSING DELHI AREA BY LINKING ASAOTI-PATLI-SULTANPUR-ASAUDAH BY NEW ELECTRIFIED BG DOUBLE LINE

CLIENT:
HARYANA RAIL INFRASTRUCTURE DEVELOPMENT CORPORATION LIMITED.

CONSULTANT:
GENERAL CONSULTANT FOR
HARYANA ORBITAL RAIL CORRIDOR
RITES Limited in consortium with SMEC International Pty. Ltd.

RITES THE INFRASTRUCTURE PEOPLE | SMEC Member of the Surbana Jurong Group

TITLE:- INDICATIVE TYPICAL ARRANGEMENT OF BEC WITH OHE STRUCTURE AND RAILS

DRG. NO.	SHEET NO.
GC-HRIDC-SYS1-DRW-ELE-005_A0	

SCALE :	ISSUE DATE	REVISED DATE
AS SHOWN	31.03.2023	

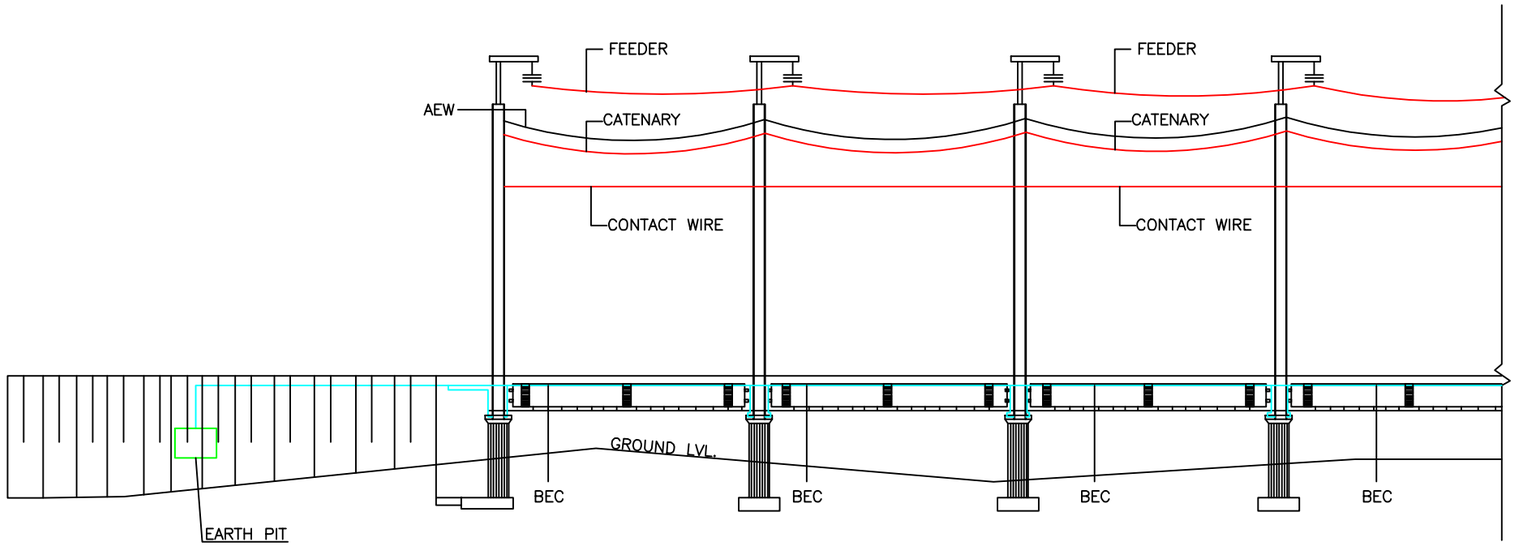

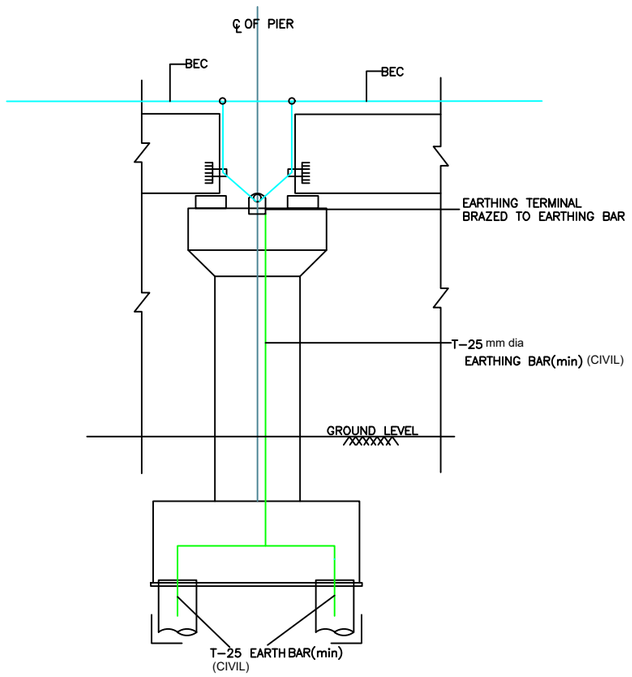

EARTHING BAR IN THE PIER

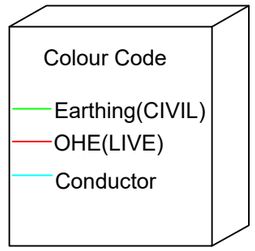

GC/HORC		HRIDC	
NAME / DESIGNATION	SIGN	NAME / DESIGNATION	SIGN
CHAHATEY RAM PD		VIKRAM YADAV GM/ A&IE/ HRIDC	
A.S. JANGHU CRE/Elect.		JYOTI SANGWAN DGM/ Elect.	
STIPHEN SAHOO SRE/Elect.			

PROJECT:
HARYANA ORBITAL RAIL CORRIDOR
CONNECTING PALWAL TO SONIPAT BYPASSING DELHI AREA BY LINKING ASAOTI-PATLI-SULTANPUR-ASAUDAH BY NEW ELECTRIFIED BG DOUBLE LINE

CLIENT:
HARYANA RAIL INFRASTRUCTURE DEVELOPMENT CORPORATION LIMITED.

CONSULTANT:
GENERAL CONSULTANT FOR
HARYANA ORBITAL RAIL CORRIDOR
RITES Limited in consortium with SMEC International Pty. Ltd.

RITES THE INFRASTRUCTURE PEOPLE | SMEC Member of the Surbana Jurong Group

TITLE:- INDICATIVE OHE, EARTHING & BONDING ARRANGEMENT ON RCC BRIDGE/ VIADUCT

DRG. NO.	SHEET NO.
GC-HRIDC-SYS1-DRW-ELE-006_A0	

SCALE :	ISSUE DATE	REVISED DATE
AS SHOWN	31.03.2023	

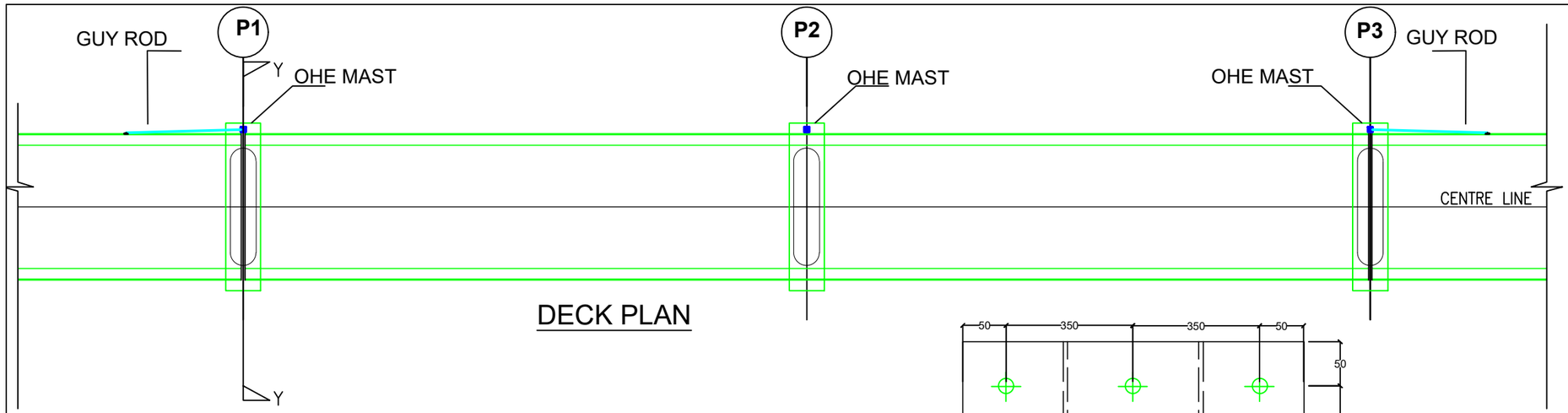

DECK PLAN

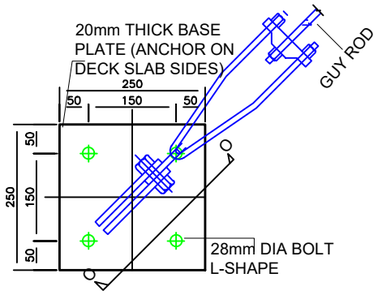

DETAIL -Z (PLAN)

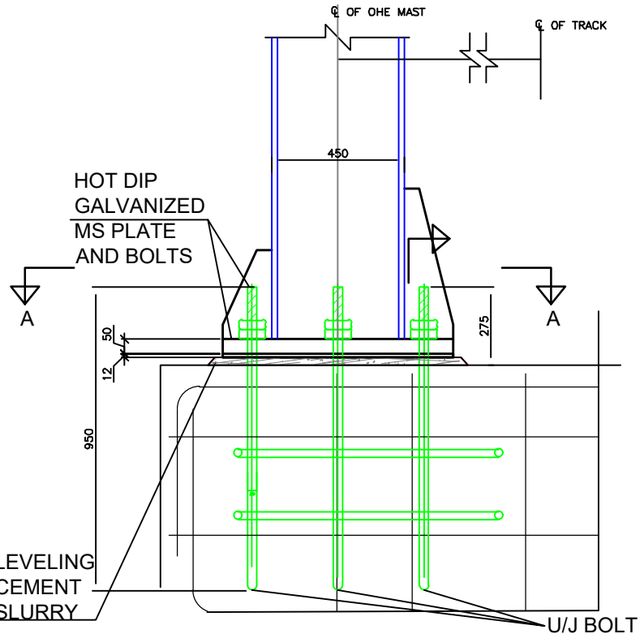

DETAIL - 1

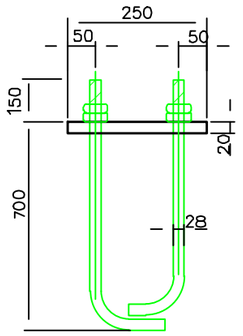

BOLT DETAIL

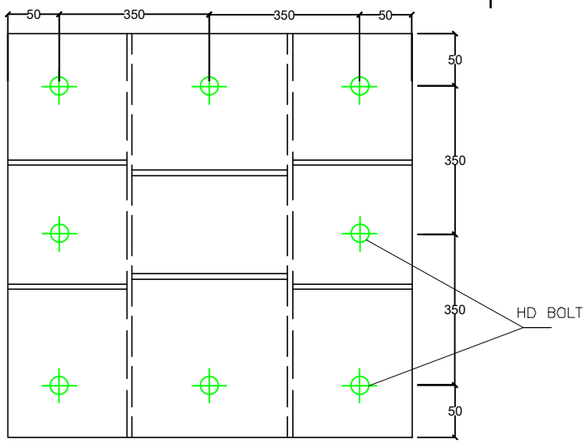

OHE STRUCTURE FIXING BOLTS
SECTION A-A

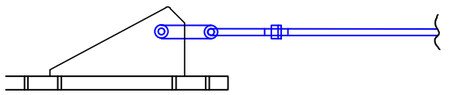

SECTION O-O

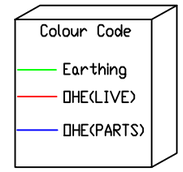

NOTE :

1. THE FOUNDATION BOLTS & CONCRETE FOR GUY ROD SHALL BE EMBEDED BY CIVIL CONTRACTOR IN THE DECK SLAB AS SHOWN.
2. ANCHOR BOLT SHALL TAKE MINIMUM TENSION OF 1000 KG.
3. Sizes are indicative and minimum,however contractor may be required to provide higher sizes as approved by the Engineer.

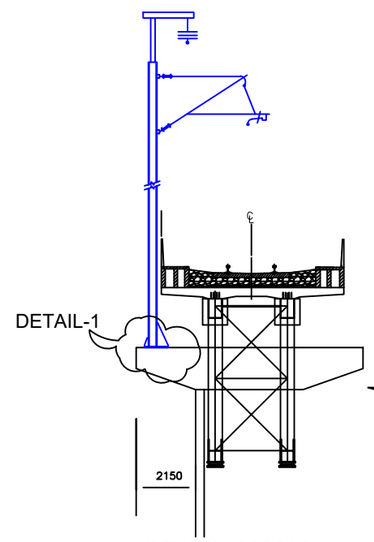

SECTION Y-Y

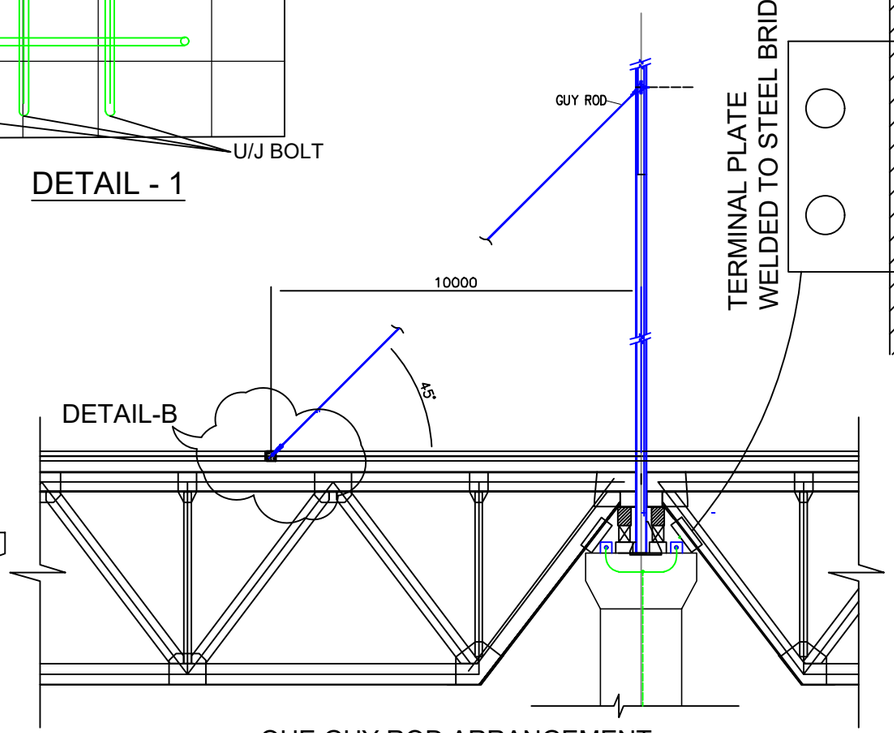

OHE GUY ROD ARRANGEMENT

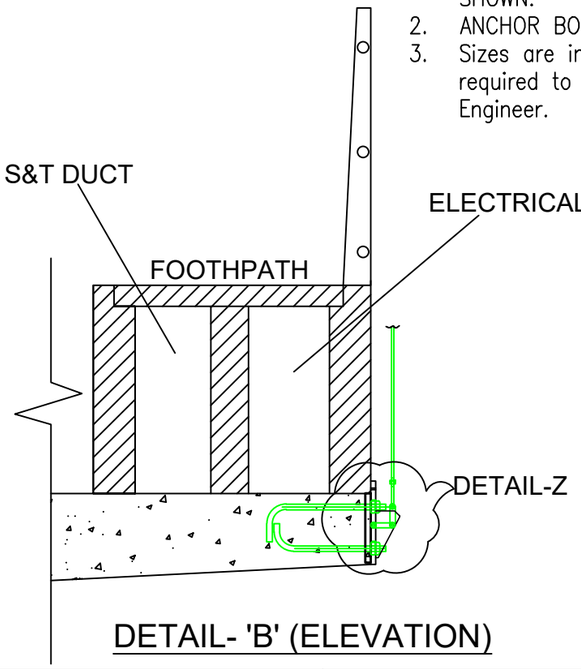

DETAIL- 'B' (ELEVATION)

GC/HORC		HRIDC	
NAME / DESIGNATION	SIGN	NAME / DESIGNATION	SIGN
CHAHATEY RAM PD		VIKRAM YADAV GM/ A&IE/ HRIDC	
A.S. JANGHU CRE/Elect.		JYOTI SANGWAN DGM/ Elect.	
STIPHEN SAHOO SRE/Elect.			

PROJECT:
HARYANA ORBITAL RAIL CORRIDOR
CONNECTING PALWAL TO SONIPAT BYPASSING DELHI AREA BY LINKING ASAOTI-PATLI-SULTANPUR-ASAUDAH BY NEW ELECTRIFIED BG DOUBLE LINE

CLIENT:
HARYANA RAIL INFRASTRUCTURE DEVELOPMENT CORPORATION LIMITED.

CONSULTANT:
GENERAL CONSULTANT FOR HARYANA ORBITAL RAIL CORRIDOR
RITES Limited in consortium with SMEC International Pty. Ltd.
RITES THE INFRASTRUCTURE PEOPLE
SMEC Member of the Surbana Jurong Group

TITLE:- INDICATIVE OHE GUY ROD ARRANGEMENT ON STEEL BRIDGE/ VIADUCT

DRG. NO.	SHEET NO.
GC-HRIDC-SYS1-DRW-ELE-007_A0	

SCALE :	ISSUE DATE	REVISED DATE
AS SHOWN	31.03.2023	

METHOD OF CALCULATION OF OHE TKM OF YARD:

1. LINE LENGTH:	AB + CD+ EF+ GH
2. CROSSOVER LENGTH	(CH:L1-CH:L2) +(CH:L3-CH:L4)+ (CH:L5-CH:L6) + (CH:L7-CH:L8) +(CH:M1-CH:M2)+(CH:M3-CH:M4)
3. CONNECTIVITY IR	CH:L9-CH:L10
4. TOTAL TKM	LINE LENGTH + CROSSOVER LENGTH + CONNECTIVITY IR

NOTE: 1. ENTIRE OVERRUN LINE SHALL BE PROVIDED WITH OHE TILL DEAD END.

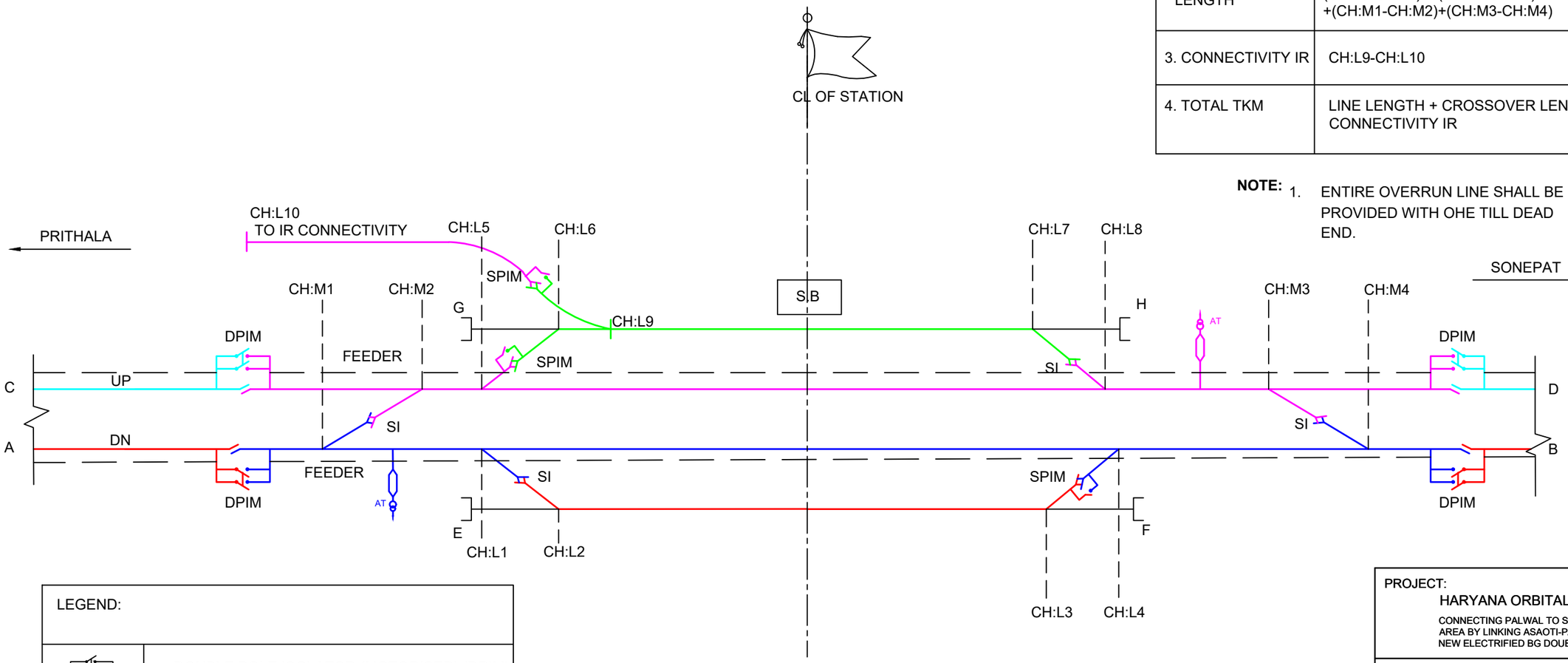

LEGEND:	
	DOUBLE POLE ISOLATOR (MOTORISED) (DPIM)
	SINGLE POLE ISOLATOR (MOTORISED) (SPIM)
	SECTION INSULATOR (SI)
	AUXILIARY TRANSFORMER (AT)

GC/HORC		HRIDC	
NAME / DESIGNATION	SIGN	NAME / DESIGNATION	SIGN
CHAHATEY RAM PD		VIKRAM YADAV GM/ A&IE/ HRIDC	
A.S. JANGHU CRE/Elect.		JYOTI SANGWAN DGM/ Elect.	
STIPHEN SAHOO SRE/Elect.			

PROJECT:
HARYANA ORBITAL RAIL CORRIDOR
CONNECTING PALWAL TO SONIPAT BYPASSING DELHI AREA BY LINKING ASAOTI-PATLI-SULTANPUR-ASAUDAH BY NEW ELECTRIFIED BG DOUBLE LINE

CLIENT:
HARYANA RAIL INFRASTRUCTURE DEVELOPMENT CORPORATION LIMITED.

CONSULTANT:
GENERAL CONSULTANT FOR HARYANA ORBITAL RAIL CORRIDOR
RITES Limited in consortium with SMEC International Pty. Ltd.

RITES THE INFRASTRUCTURE PEOPLE | SMEC Member of the Surbana Jurong Group

TITLE:- INDICATIVE TYPICAL SECTIONING ARRANGEMENT OF STATION

DRG. NO.	SHEET NO.
GC-HRIDC-SYS1-DRW-ELE-008_A1	

SCALE :	ISSUE DATE	REVISED DATE
AS SHOWN	31.03.2023	08.07.2023

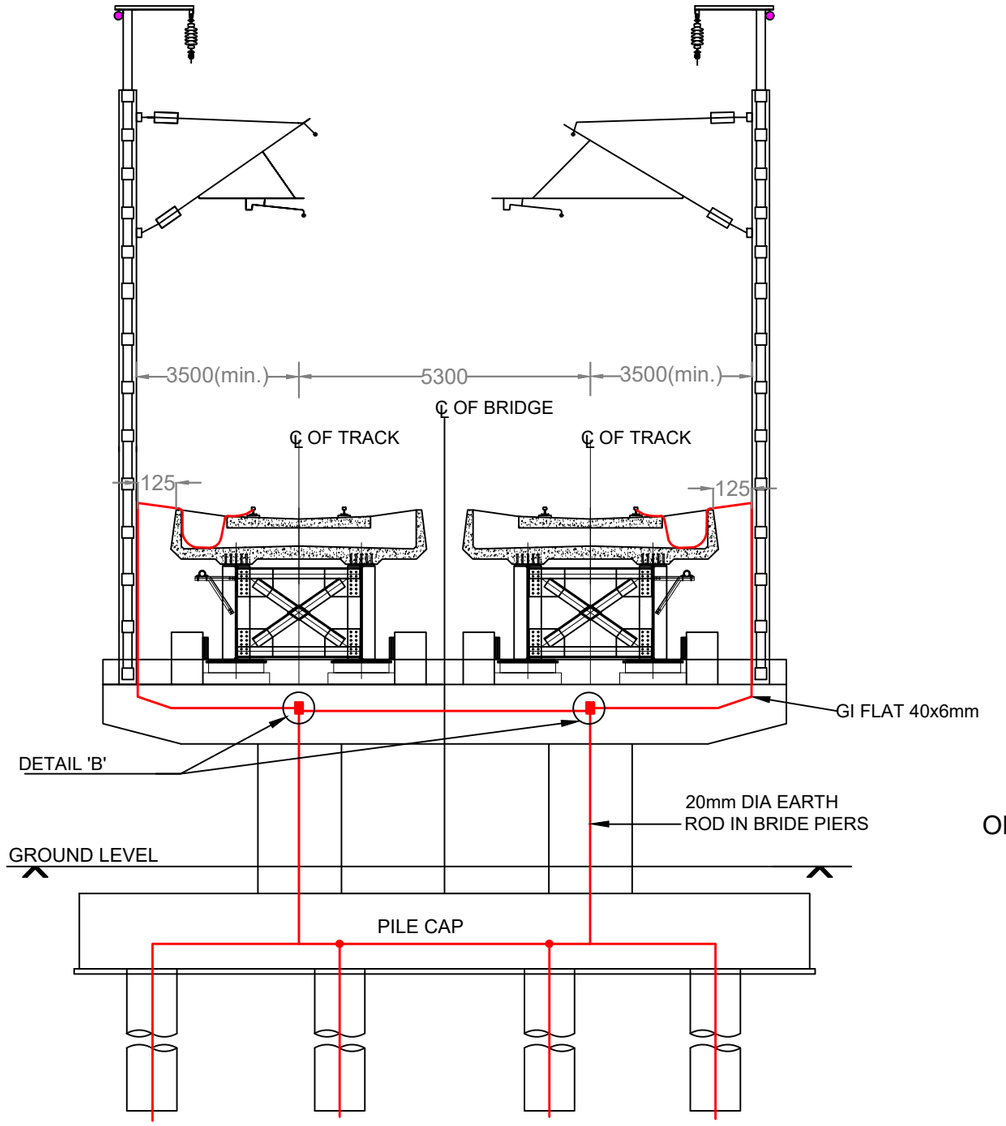

SECTION SHOWING LOCATIONS OF AEC, BEC AND THEIR INTER CONNECTIONS TO STEEL OHE MAST

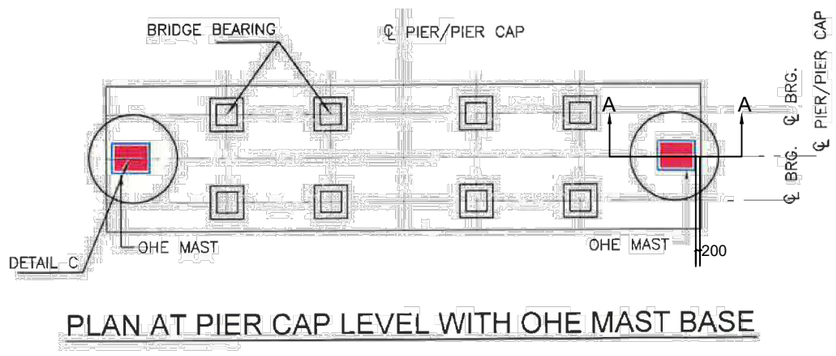

PLAN AT PIER CAP LEVEL WITH OHE MAST BASE

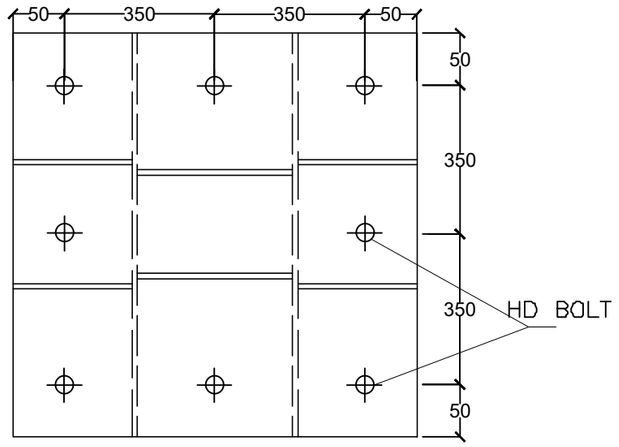

OHE STRUCTURE FIXING BOLTS AND BASE PLATE
SECTION A-A

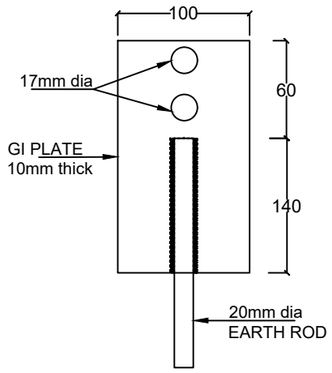

DETAIL 'B'

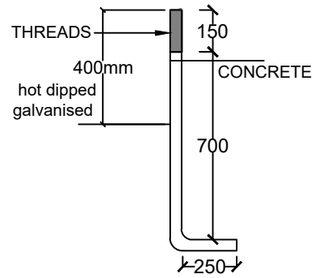

BOLT DETAIL

NOTES:

1. ALL DIMENSIONS ARE IN MILIMETERS.
2. EACH MAST SHALL BE CONNECTED TO RAIL BY 40X6MM GI FLAT.
3. TEMPLATE FOR HOLDING DOWN BOLT FOR OHE BASE PLATE AT PIER.
4. DIA OF BOLT, LENGTH, SHAPE, MATERIAL AND LOCATION SHALL BE PROVIDED BY OHE CONTRACTOR TO CIVIL CONTRACTOR.
5. CIVIL CONTRACTOR SHALL SUPPLY HOLDING DOWN BOLTS WITH 5MM THICK TEMPLATE AND ERECT IN COORDINATION WITH OHE CONTRACTOR.
6. EARTHING GI PLATE SHALL BE PROVIDED BY CIVIL CONTRACTOR WELDED WITH 20MM DIA ROD FOR OHE EARTHING WITH PIER EARTHING.
7. GI PLATE SIZE 200X100X10MM HAVING TWO HOLES OF 17MM DIA EACH.
8. 20MM DIA ROD SHALL BE 140MM OUTSIDE THE CONCRETE.

GC/HORC		HRIDC	
NAME / DESIGNATION	SIGN	NAME / DESIGNATION	SIGN
CHAHATEY RAM PD		VIKRAM YADAV GM/ A&IE/ HRIDC	
A.S. JANGHU CRE/Elect.		JYOTI SANGWAN DGM/ Elect.	
STIPHEN SAHOO SRE/Elect.			

PROJECT:
HARYANA ORBITAL RAIL CORRIDOR
CONNECTING PALWAL TO SONIPAT BYPASSING DELHI AREA BY LINKING ASAOTI-PATLI-SULTANPUR-ASAUDAH BY NEW ELECTRIFIED BG DOUBLE LINE

CLIENT:
HARYANA RAIL INFRASTRUCTURE DEVELOPMENT CORPORATION LIMITED.

CONSULTANT:
GENERAL CONSULTANT FOR
HARYANA ORBITAL RAIL CORRIDOR
RITES Limited in consortium with SMEC International Pty. Ltd.

RITES THE INFRASTRUCTURE PEOPLE | SMEC Member of the Surbana Jurong Group

TITLE:- INDICATIVE OHE MAST ON GIRDER BRIDGE WITH EARTHING

DRG. NO.	SHEET NO.
GC-HRIDC-SYS1-DRW-ELE-009_A1	

SCALE :	ISSUE DATE	REVISED DATE
AS SHOWN	31.03.2023	08.07.2023

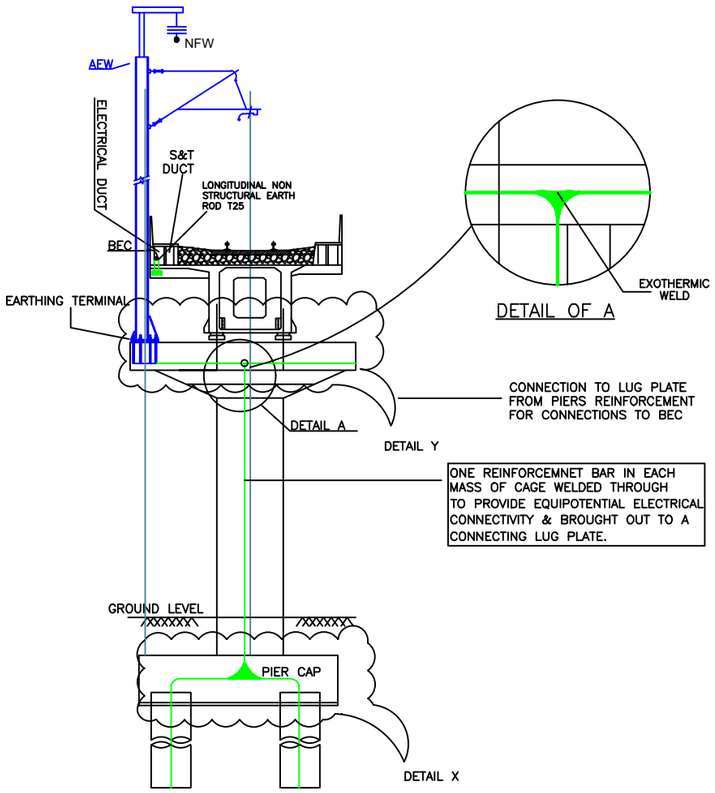

SECTION SHOWING LOCATIONS OF AEW,BEC AND THEIR INTER CONNECTIONS TO STEEL OHE MAST

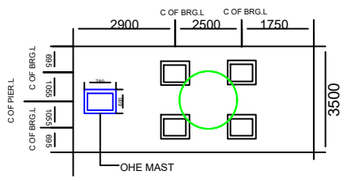

PLAN AT PIER CAP LEVEL WITH OHE MAST(TYPICAL)

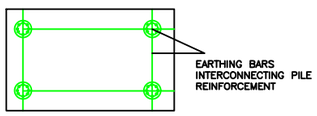

DETAIL OF X

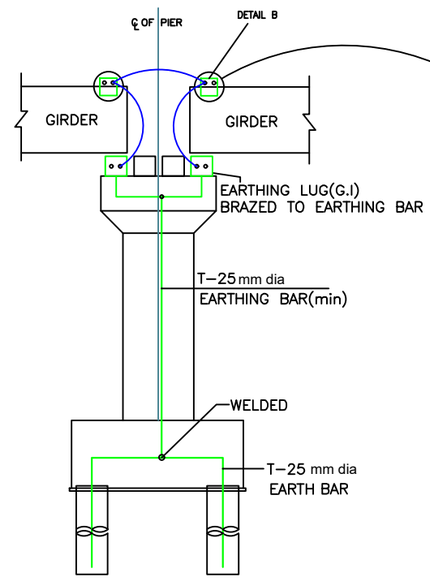

EARTHING & INTERCONNECTION OF EARTH TERMINALS OF RCC DECKS

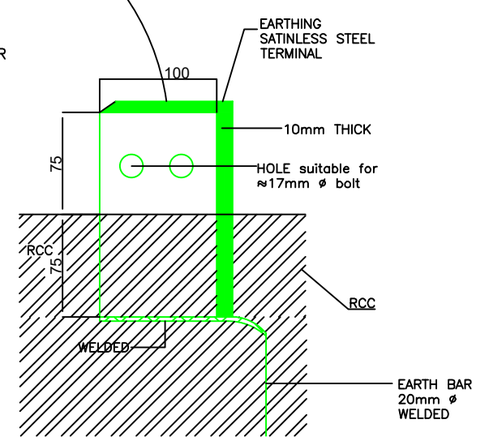

TERMINAL PLATE DETAIL OF B

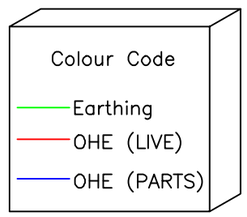

GC/HORC		HRIDC	
NAME / DESIGNATION	SIGN	NAME / DESIGNATION	SIGN
CHAHATEY RAM PD		VIKRAM YADAV GM/ A&IE/ HRIDC	
A.S. JANGHU CRE/Elect.		JYOTI SANGWAN DGM/ Elect.	
STIPHEN SAHOO SRE/Elect.			

PROJECT:
HARYANA ORBITAL RAIL CORRIDOR
CONNECTING PALWAL TO SONIPAT BYPASSING DELHI AREA BY LINKING ASAOTI-PATLI-SULTANPUR-ASAUDAH BY NEW ELECTRIFIED BG DOUBLE LINE

CLIENT:
HARYANA RAIL INFRASTRUCTURE DEVELOPMENT CORPORATION LIMITED.

CONSULTANT:
GENERAL CONSULTANT FOR HARYANA ORBITAL RAIL CORRIDOR
RITES Limited in consortium with SMEC International Pty. Ltd.
RITES THE INFRASTRUCTURE PEOPLE | SMEC Member of the Surbana Jurong Group

TITLE:- INDICATIVE EARTHING & BONDING OF OHE STRUCTURE ALONG THE BRIDGE, GIRDERS (RCC) & PIERS

DRG. NO.	SHEET NO.
GC-HRIDC-SYS1-DRW-ELE-010_A0	

SCALE :	ISSUE DATE	REVISED DATE
AS SHOWN	31.03.2023	

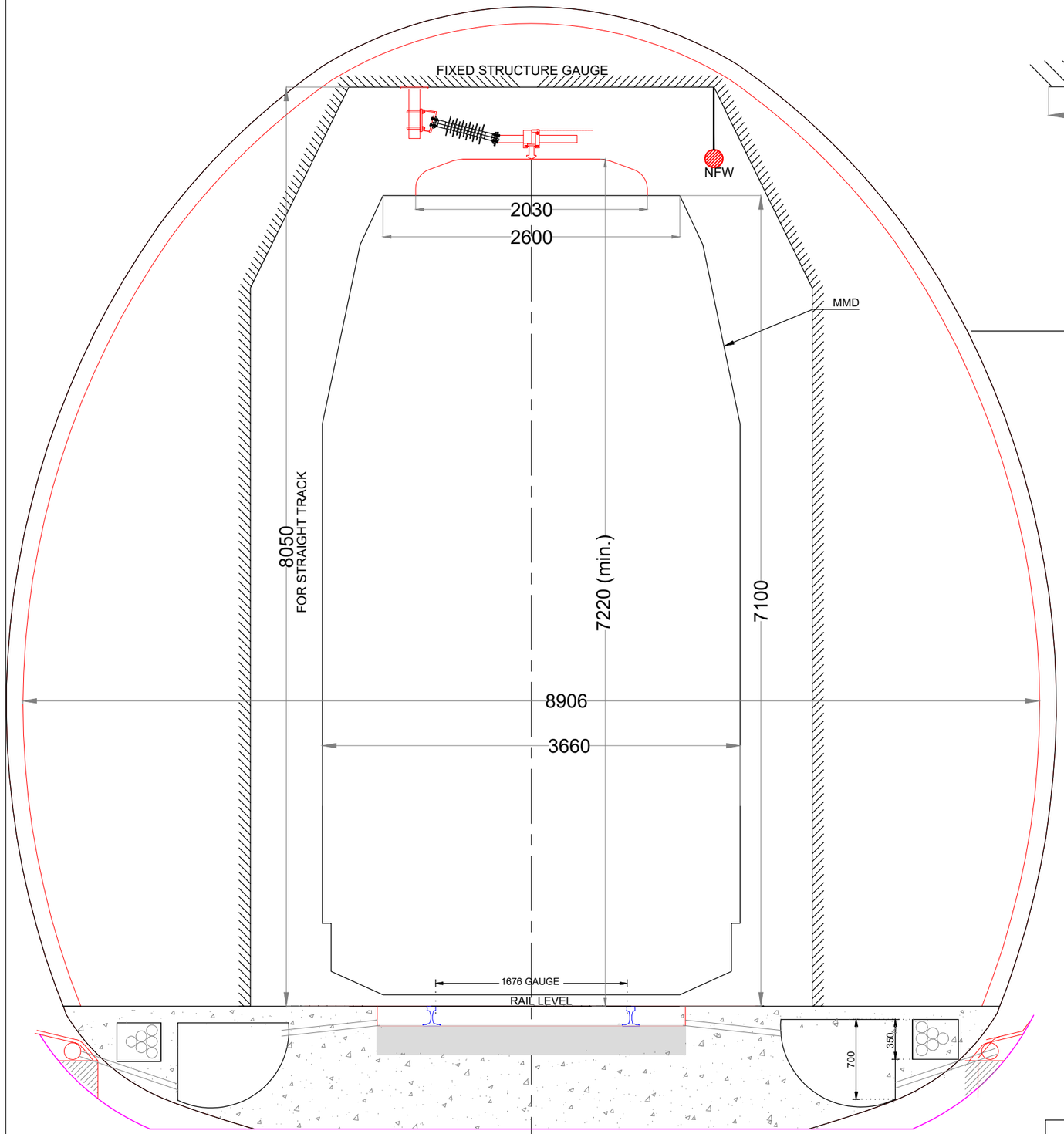

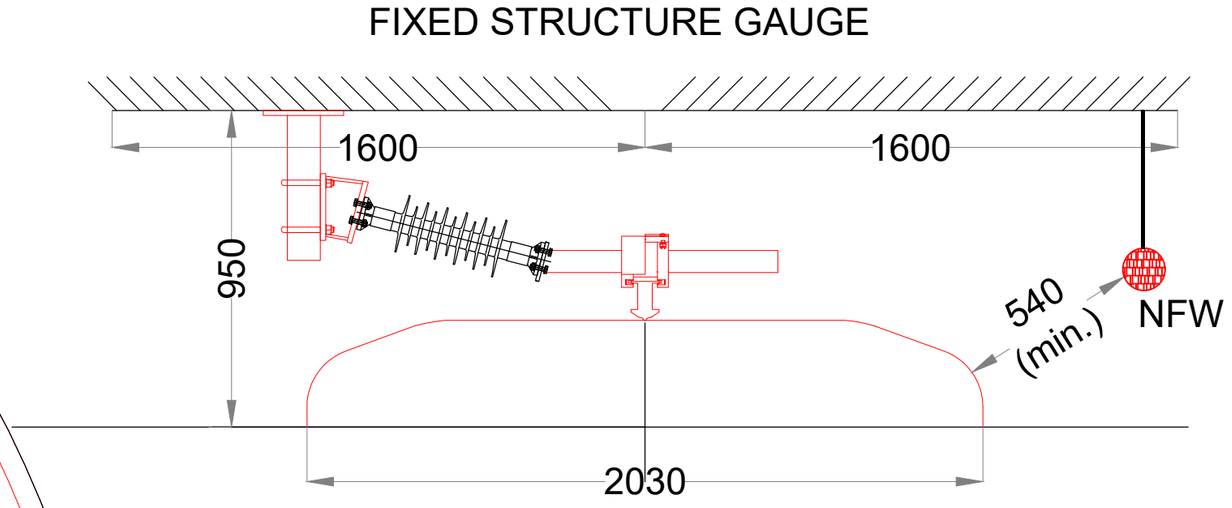

DETAILS OF 'A'

GC/HORC		HRIDC	
NAME / DESIGNATION	SIGN	NAME / DESIGNATION	SIGN
CHAHATEY RAM PD		VIKRAM YADAV GM/ A&IE/ HRIDC	
A.S. JANGHU CRE/Elect.		JYOTI SANGWAN DGM/ Elect.	
STIPHEN SAHOO SRE/Elect.			

PROJECT:
HARYANA ORBITAL RAIL CORRIDOR
CONNECTING PALWAL TO SONIPAT BYPASSING DELHI AREA BY LINKING ASAOTI-PATLI-SULTANPUR-ASAUDAH BY NEW ELECTRIFIED BG DOUBLE LINE

CLIENT:
HARYANA RAIL INFRASTRUCTURE DEVELOPMENT CORPORATION LIMITED.

CONSULTANT:
GENERAL CONSULTANT FOR
HARYANA ORBITAL RAIL CORRIDOR
RITES Limited in consortium with SMEC International Pty. Ltd.

RITES THE INFRASTRUCTURE PEOPLE | SMEC Member of the Surbana Jurong Group

TITLE:- INDICATIVE 2x25 KV HIGH RISE ROCS IN TUNNEL

DRG. NO.	SHEET NO.
GC-HRIDC-SYS1-DRW-ELE-011_A1	

SCALE :	ISSUE DATE	REVISED DATE
AS SHOWN	31.03.2023	08.07.2023

SCHEMATIC DIAGRAM OF 220/132/55kV OF TSS
PRITHLA - HARSANA KALAN SECTION

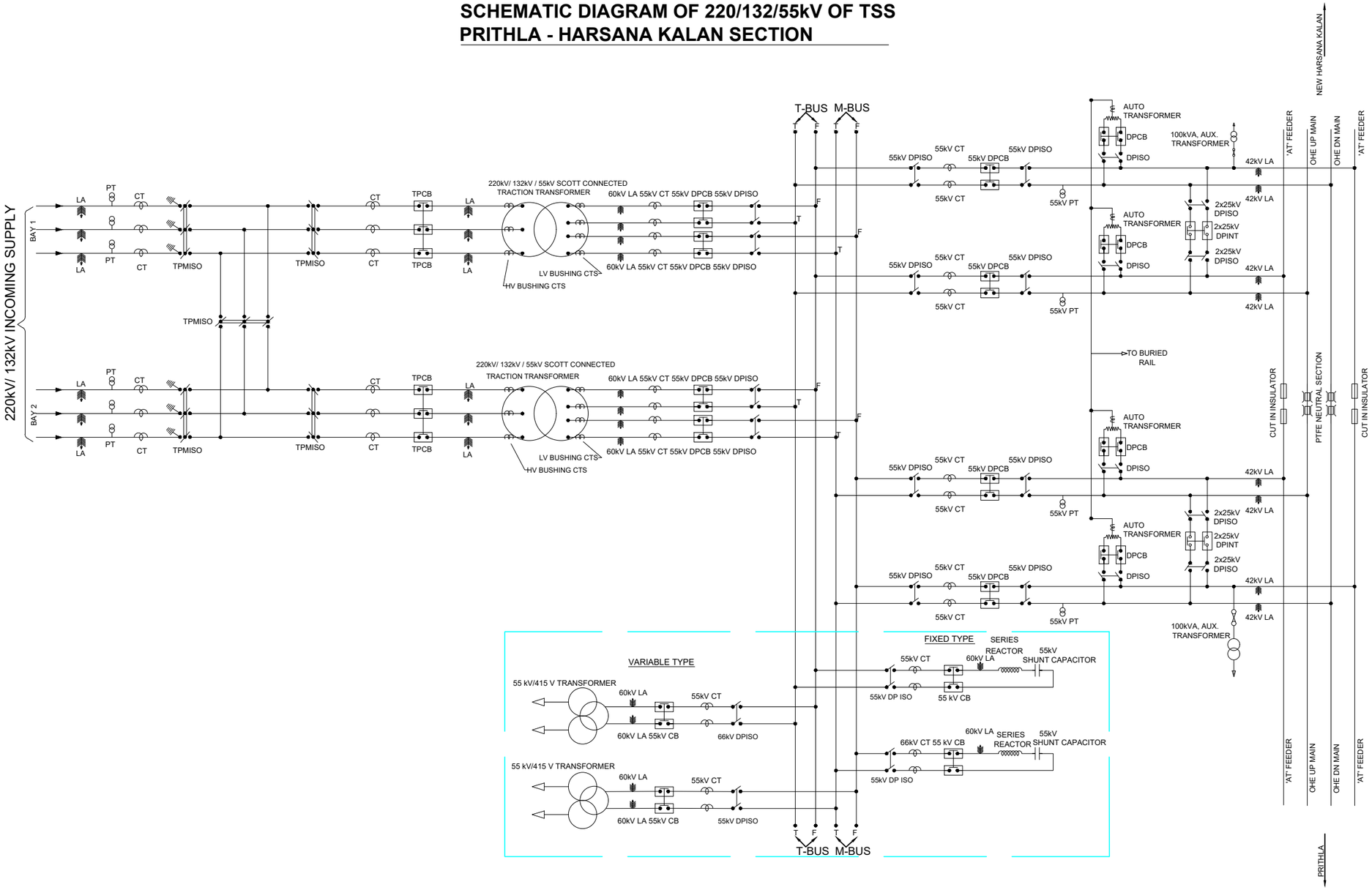

LEGEND

DESCRIPTION	SLD SYMBOL
220/ 132kV TRIPLE POLE MOTORIZED ISOLATOR WITH EARTH SWITCH	
220/ 132kV TRIPLE POLE MOTORIZED ISOLATOR WITHOUT EARTH SWITCH	
220/ 132kV CURRENT TRANSFORMER	
220/ 132kV POTENTIAL TRANSFORMER	
220/ 132kV TRIPLE POLE SF6 CIRCUIT BREAKER	
LIGHTNING ARRESTER	
SCOTT-CONNECTED TRACTION TRANSFORMER	
60kV, LIGHTNING ARRESTER	
55kV, CURRENT TRANSFORMER	

DESCRIPTION	SLD SYMBOL
55kV, DOUBLE POLE CIRCUIT BREAKER	
55kV (or) 25kV, DOUBLE POLE ISOLATOR (MANUAL)	
55kV, POTENTIAL TRANSFORMER	
12.3 MVA, 55kV/27.5kV AUTO TRANSFORMER	
25kV, DOUBLE POLE INTERRUPTER	
55kV SHUNT CAPACITOR BANK	
55kV SERIES REACTOR DETUNED	
55kV/ 415 V COUPLING TRANSFORMER (FOR PFC)	
25 kV/240V 100kVA LT SUPPLY TRANSFORMER	

GC/HORC		HRIDC	
NAME / DESIGNATION	SIGN	NAME / DESIGNATION	SIGN
CHAHATEY RAM PD		VIKRAM YADAV GM/ A&IE/ HRIDC	
A.S. JANGHU CRE/Elect.		JYOTI SANGWAN DGM/ Elect.	
STIPHEN SAHOO SRE/Elect.			

PROJECT:
HARYANA ORBITAL RAIL CORRIDOR
CONNECTING PALWAL TO SONIPAT BYPASSING DELHI AREA BY LINKING ASAOTI-PATLI-SULTANPUR-ASAUDAH BY NEW ELECTRIFIED BG DOUBLE LINE

CLIENT:
HARYANA RAIL INFRASTRUCTURE DEVELOPMENT CORPORATION LIMITED.

CONSULTANT:
GENERAL CONSULTANT FOR HARYANA ORBITAL RAIL CORRIDOR
RITES Limited in consortium with SMEC International Pty. Ltd.
THE INFRASTRUCTURE PEOPLE
Member of the Surbana Jurong Group

TITLE:-INDICATIVE SINGLE LINE DIAGRAM OF TRACTION SUBSTATION 220/132/2x25kV SCOTT CONNECTED TRAMSFORMER

DRG. NO.	SHEET NO.
GC-HRIDC-SYS1-DRW-ELE-012_A0	

SCALE :	ISSUE DATE	REVISED DATE
AS SHOWN	31.03.2023	

INDICATIVE CONTROL ROOM BUILDING FOR TRACTION SUB-STATION

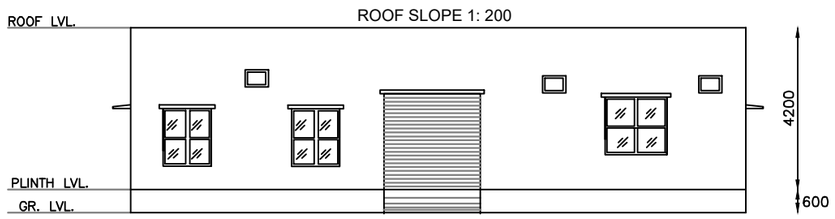

ELEVATION

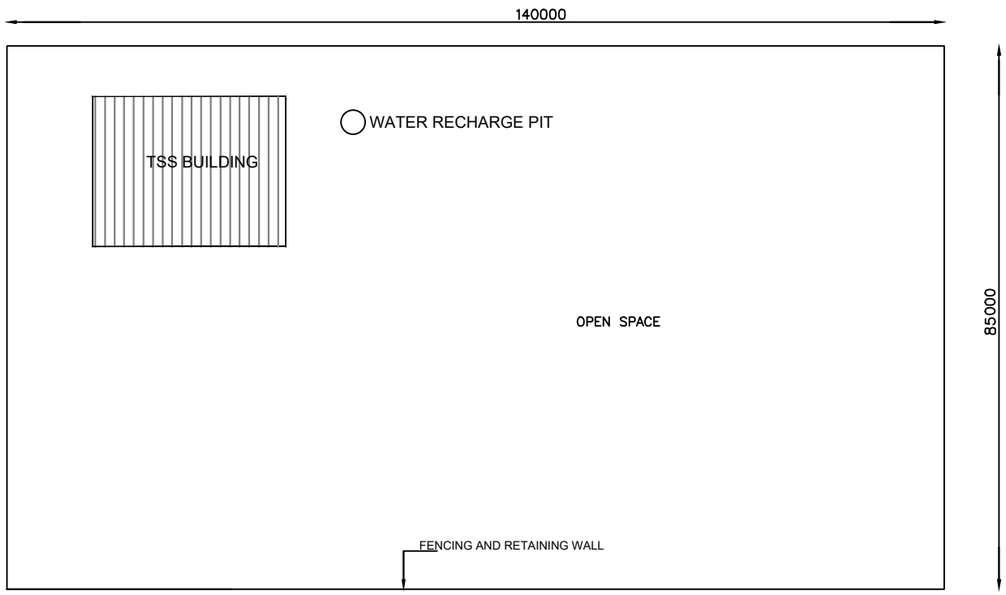

LAYOUT PLAN

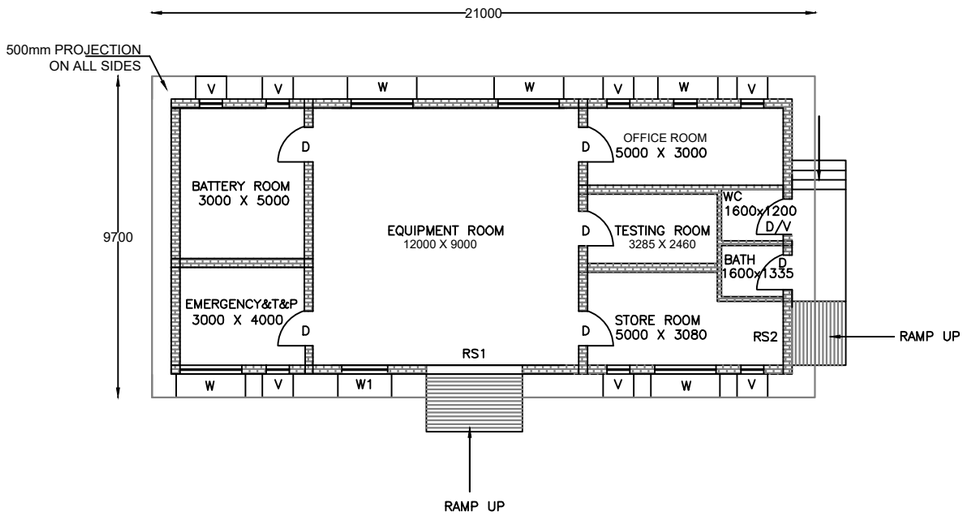

GROUND FLOOR PLAN

Note:-

1. All dimensions are in millimeters.
2. All the dimensions in the drawing are indicative.
3. Provision of Meter Room shall be kept along with rooms indicated above.
4. 1000mm wide CC M25 plinth protection shall be provided all round the building.

GC/HORC		HRIDC	
NAME / DESIGNATION	SIGN	NAME / DESIGNATION	SIGN
CHAHATEY RAM PD		VIKRAM YADAV GM/ A&IE/ HRIDC	
A.S. JANGHU CRE/Elect.		JYOTI SANGWAN DGM/ Elect.	
STIPHEN SAHOO SRE/Elect.			

PROJECT:
HARYANA ORBITAL RAIL CORRIDOR
CONNECTING PALWAL TO SONIPAT BYPASSING DELHI AREA BY LINKING ASAOTI-PATLI-SULTANPUR-ASAUDAH BY NEW ELECTRIFIED BG DOUBLE LINE

CLIENT:
HARYANA RAIL INFRASTRUCTURE DEVELOPMENT CORPORATION LIMITED.

CONSULTANT:
GENERAL CONSULTANT FOR HARYANA ORBITAL RAIL CORRIDOR
RITES Limited in consortium with SMEC International Pty. Ltd.
RITES THE INFRASTRUCTURE PEOPLE | SMEC Member of the Surbana Jurong Group

TITLE:- INDICATIVE CONTROL ROOM BUILDING FOR TSS

DRG. NO.	SHEET NO.
GC-HRIDC-SYS1-DRW-ELE-013_A1	

SCALE :	ISSUE DATE	REVISED DATE
AS SHOWN	31.03.2023	08.07.2023

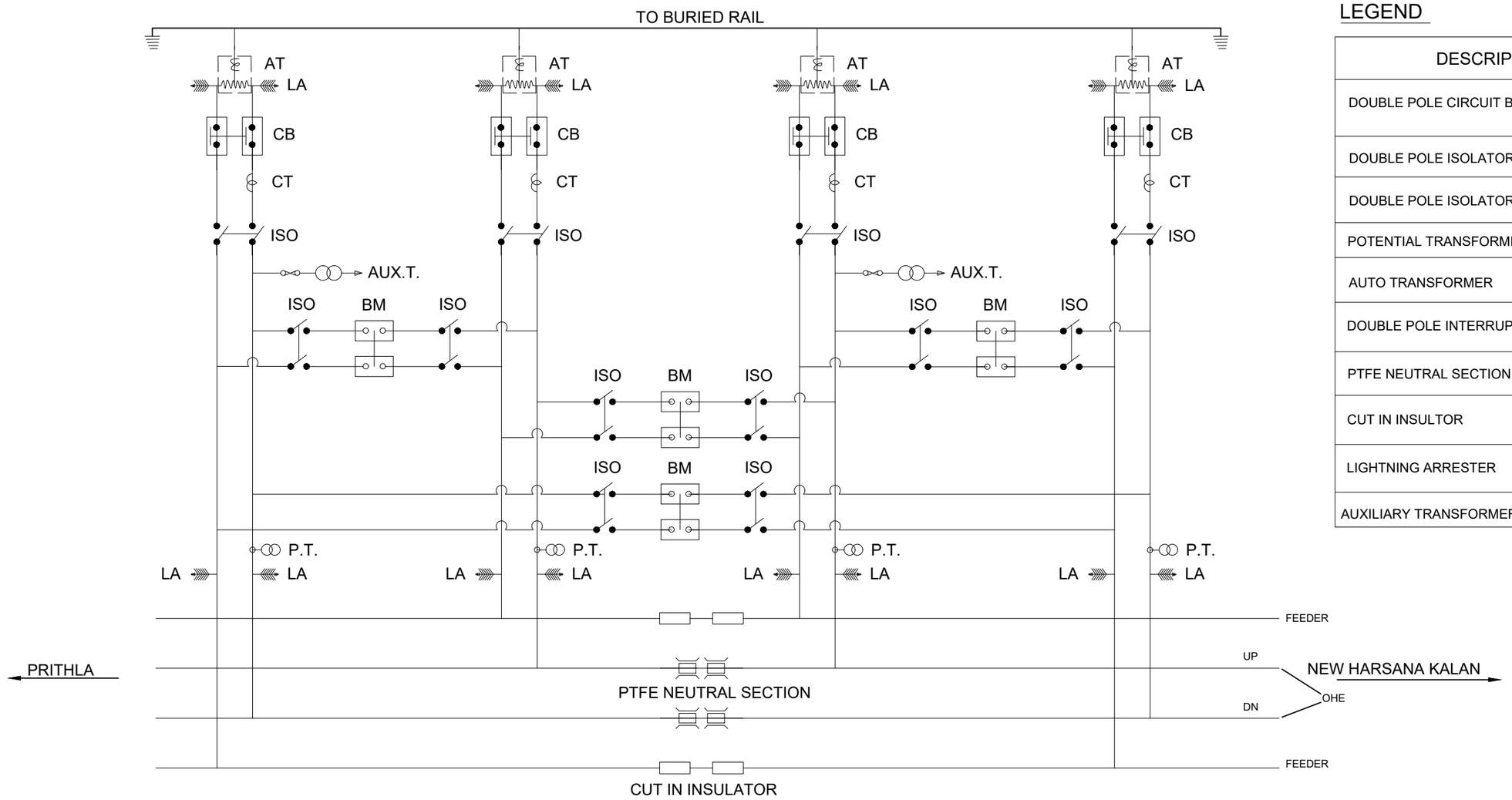

LEGEND

DESCRIPTION	SLD SYMBOL
DOUBLE POLE CIRCUIT BREAKER	
DOUBLE POLE ISOLATOR	
DOUBLE POLE ISOLATOR (MOTORISED)	
POTENTIAL TRANSFORMER	
AUTO TRANSFORMER	
DOUBLE POLE INTERRUPTER	
PTFE NEUTRAL SECTION	
CUT IN INSULTOR	
LIGHTNING ARRESTER	
AUXILIARY TRANSFORMER	

GC/HORC		HRIDC	
NAME / DESIGNATION	SIGN	NAME / DESIGNATION	SIGN
CHAHATEY RAM PD		VIKRAM YADAV GM/ A&IE/ HRIDC	
A.S. JANGHU CRE/Elect.		JYOTI SANGWAN DGM/ Elect.	
STIPHEN SAHOO SRE/Elect.			

PROJECT:
HARYANA ORBITAL RAIL CORRIDOR
CONNECTING PALWAL TO SONIPAT BYPASSING DELHI AREA BY LINKING ASAOTI-PATLI-SULTANPUR-ASAUDAH BY NEW ELECTRIFIED BG DOUBLE LINE

CLIENT:
HARYANA RAIL INFRASTRUCTURE DEVELOPMENT CORPORATION LIMITED.

CONSULTANT:
GENERAL CONSULTANT FOR
HARYANA ORBITAL RAIL CORRIDOR
RITES Limited in consortium with SMEC International Pty. Ltd.

RITES THE INFRASTRUCTURE PEOPLE | SMEC Member of the Surbana Jurong Group

TITLE:- INDICATIVE SINGLE LINE DIAGRAM OF SECTIONING POST (SP)

DRG. NO.	SHEET NO.
GC-HRIDC-SYS1-DRW-ELE-014_A1	

SCALE :	ISSUE DATE	REVISED DATE
AS SHOWN	31.03.2023	08.07.2023

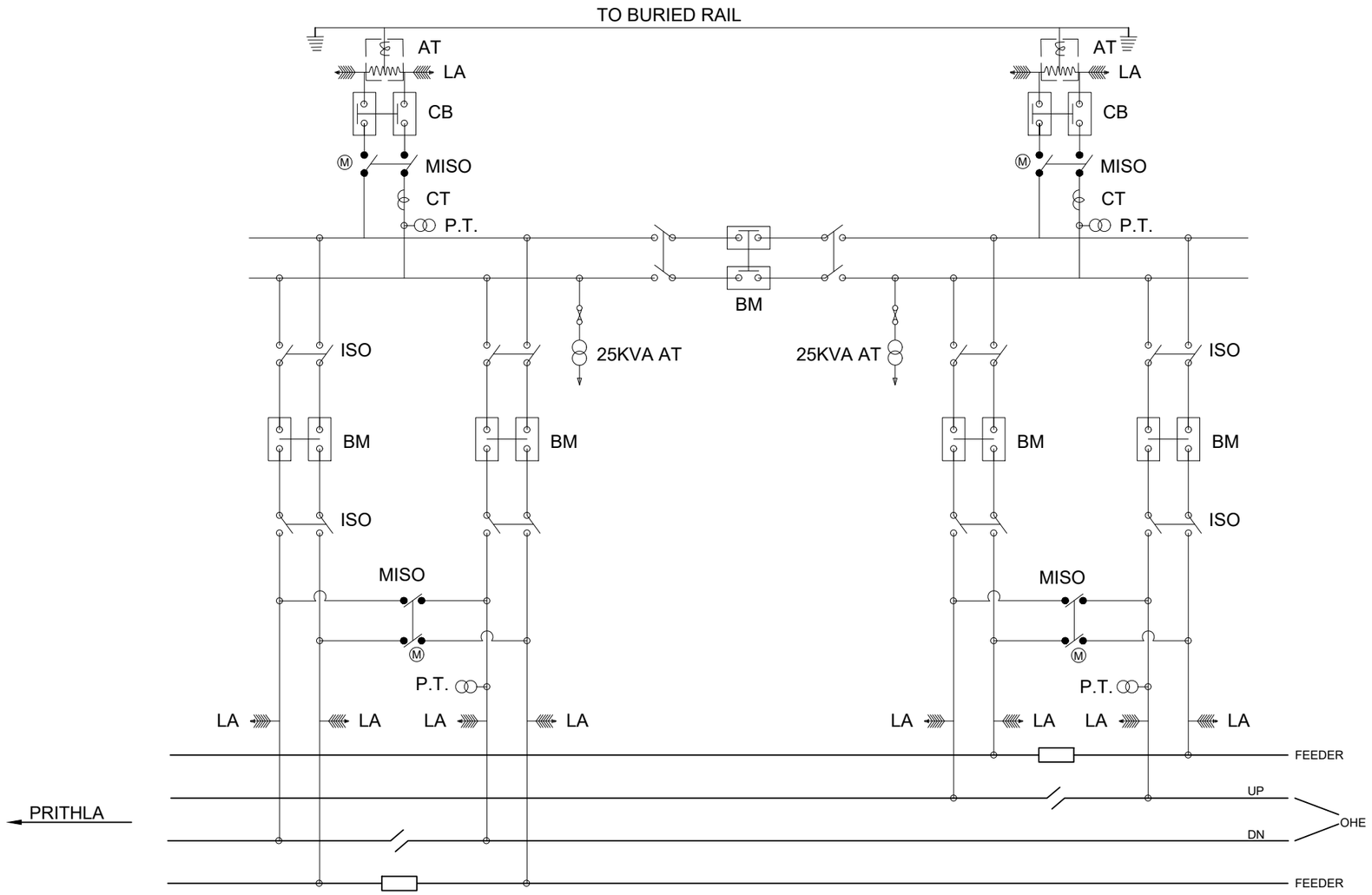

LEGEND

DESCRIPTION	SLD SYMBOL
DOUBLE POLE CIRCUIT BREAKER	
DOUBLE POLE ISOLATOR	
DOUBLE POLE ISOLATOR (MOTORISED)	
POTENTIAL TRANSFORMER	
AUTO TRANSFORMER	
DOUBLE POLE INTERRUPTER	
INSULATED OVERLAP	
CUT IN INSULTOR	
LIGHTNING ARRESTER	
25 kV/240V 25kVA LT SUPPLY TRANSFORMER	

GC/HORC		HRIDC	
NAME / DESIGNATION	SIGN	NAME / DESIGNATION	SIGN
CHAHATEY RAM PD		VIKRAM YADAV GM/ A&IE/ HRIDC	
A.S. JANGHU CRE/Elect.		JYOTI SANGWAN DGM/ Elect.	
STIPHEN SAHOO SRE/Elect.			

PROJECT:
HARYANA ORBITAL RAIL CORRIDOR
CONNECTING PALWAL TO SONIPAT BYPASSING DELHI AREA BY LINKING ASAOTI-PATLI-SULTANPUR-ASAUDAH BY NEW ELECTRIFIED BG DOUBLE LINE

CLIENT:
HARYANA RAIL INFRASTRUCTURE DEVELOPMENT CORPORATION LIMITED.

CONSULTANT:
GENERAL CONSULTANT FOR
HARYANA ORBITAL RAIL CORRIDOR
RITES Limited in consortium with SMEC International Pty. Ltd.

RITES THE INFRASTRUCTURE PEOPLE | SMEC Member of the Surbana Jurong Group

TITLE:- INDICATIVE SINGLE LINE DIAGRAM OF SUB-SECTIONING POST (SSP)

DRG. NO.	SHEET NO.
GC-HRIDC-SYS1-DRW-ELE-015_A1	

SCALE :	ISSUE DATE	REVISED DATE
AS SHOWN	31.03.2023	08.07.2023

CONTROL ROOM BUILDING FOR SP & SSP

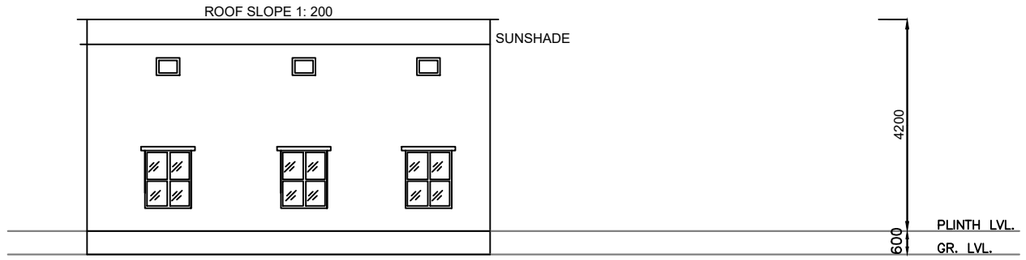

ELEVATION

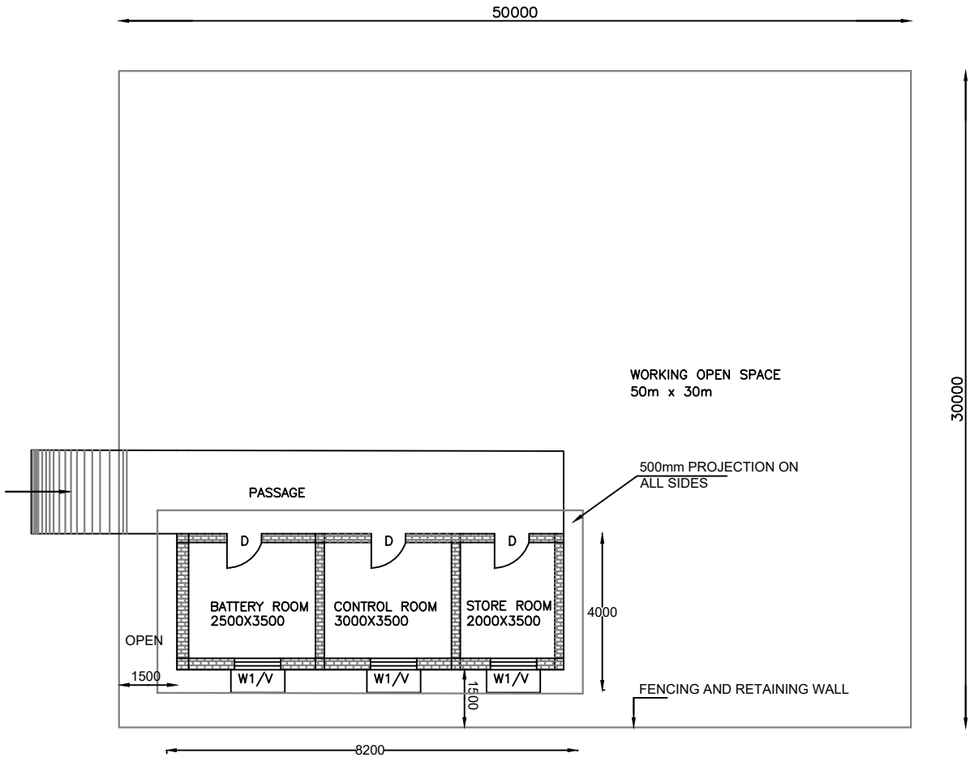

GROUND FLOOR PLAN

Note:-

1. All dimensions are in millimeters.
2. All the dimensions in the drawing are indicative.
3. Inside road shall be 4m wide.

GC/HORC		HRIDC	
NAME / DESIGNATION	SIGN	NAME / DESIGNATION	SIGN
CHAHATEY RAM PD		VIKRAM YADAV GM/ A&IE/ HRIDC	
A.S. JANGHU CRE/Elect.		JYOTI SANGWAN DGM/ Elect.	
STIPHEN SAHOO SRE/Elect.			

PROJECT:
HARYANA ORBITAL RAIL CORRIDOR
CONNECTING PALWAL TO SONIPAT BYPASSING DELHI AREA BY LINKING ASAOTI-PATLI-SULTANPUR-ASAUDAH BY NEW ELECTRIFIED BG DOUBLE LINE

CLIENT:
HARYANA RAIL INFRASTRUCTURE DEVELOPMENT CORPORATION LIMITED.

CONSULTANT:
GENERAL CONSULTANT FOR
HARYANA ORBITAL RAIL CORRIDOR
RITES Limited in consortium with SMEC International Pty. Ltd.

RITES THE INFRASTRUCTURE PEOPLE | SMEC Member of the Surbana Jurong Group

TITLE:- INDICATIVE CONTROL ROOM BUILDING FOR SP & SSP

DRG. NO.	SHEET NO.
GC-HRIDC-SYS1-DRW-ELE-016_A1	

SCALE :	ISSUE DATE	REVISED DATE
AS SHOWN	31.03.2023	08.07.2023

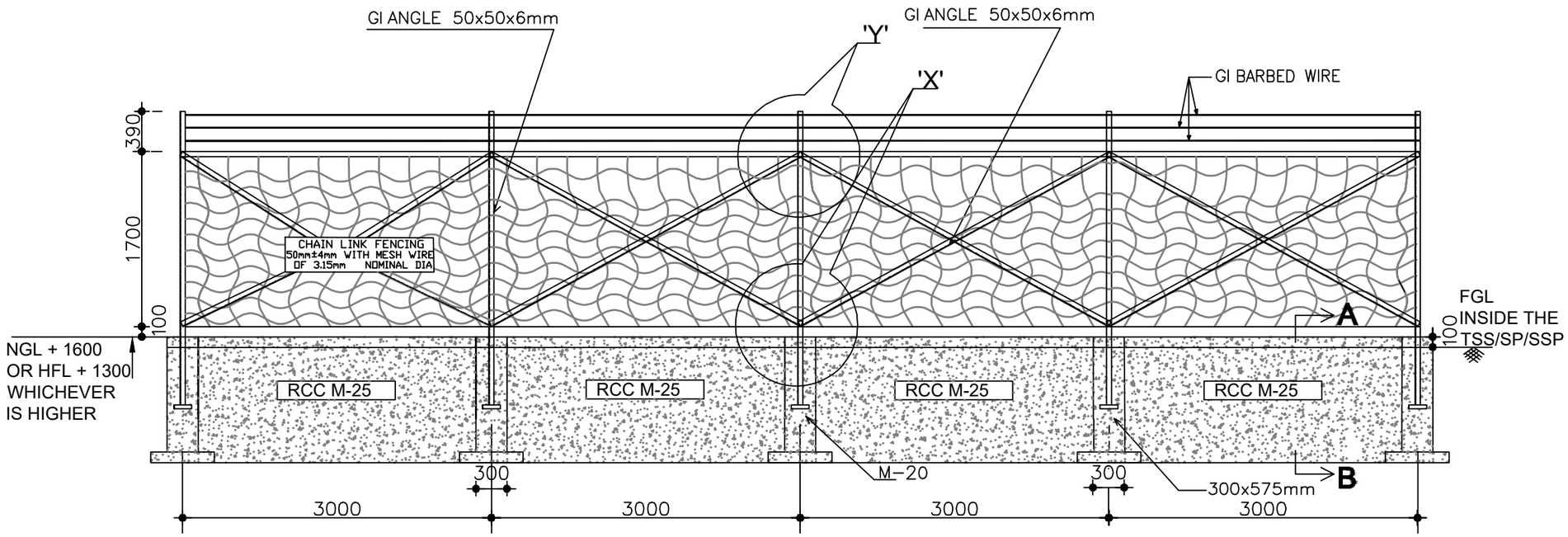

TYPICAL DRAWING FOR CHAIN LINK FENCING

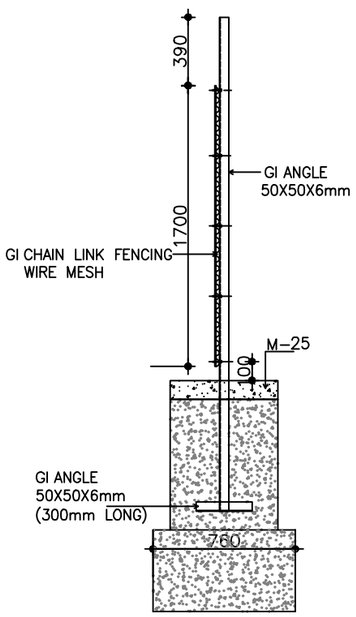

TYPICAL FIXING ARRANGEMENT OF FLAT TO HOLD CHAIN LINK FENCING

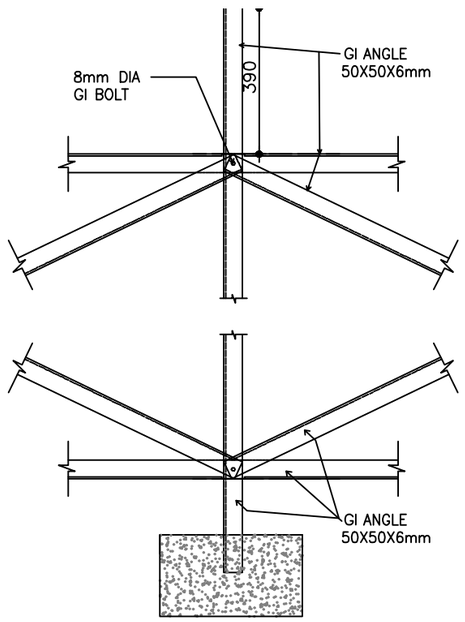

DETAIL 'X' & 'Y'
TYPICAL FIXING ARRANGEMENT OF VERTICAL, HORIZONTAL & DIAGONAL

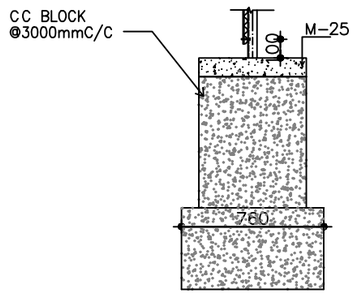

SECTION- A B

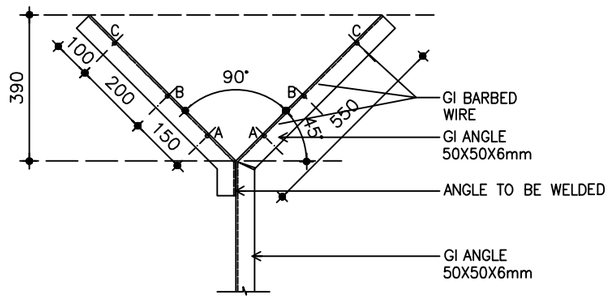

TYPICAL ARRANGEMENT OF Y - POST AND BARBED WIRE

NOTES:
1. ALL DIMENSIONS ARE IN MILIMETERS UNLESS NOTES OTHERWISE.
2. WRITTEN DIMENSIONS ARE TO BE FOLLOWED. DRAWINGS ARE NOT TO BE SCALED.
3. ANY DISCREPANCY IN THE DRAWING SHALL BE BROUGHT TO THE NOTICE OF ENGINEER.
4. EXPANSION JOINT IN MASONRY AND ALSO IN CHAIN LINK SHOULD BE PROVIDED AT REGULAR INTERVAL OF (30m C/C).
5. THE MESH SIZE OF CHAIN LINK SHOULD BE 50mm (+/-) 4mm AND MESH WIRE SHOULD HAVE NOMINAL DIAMETER OF 3.15mm.
6. DEPTH OF FOUNDATION BELOW FILLED UP LEVEL IS TENTATIVE. THIS MAY BE INCREASED BY ENGINEER AS PER SITE CONDITION.
7. THE LOCATION AND STATION, WHERE THIS CHAIN LINK FENCING IS TO BE PROVIDED, WILL BE AS PER EMPLOYER'S REQUIREMENTS.
8. WIRE MESH AND ANGLE SHALL BE PROPERLY FIXED WITH SUITABLE FIXTURE.
9. ALL Y- POST, BARBED WIRE, VERTICAL , HORIZONTAL AND DIAGONAL ANGLES ON TOP SHALL BE HOT DIPPED GALVANIZED IRON.
10. RETAINING WALL SHALL BE PROVIDED ON ALL 4 SIDES.

GC/HORC		HRIDC	
NAME / DESIGNATION	SIGN	NAME / DESIGNATION	SIGN
CHAHATEY RAM PD		VIKRAM YADAV GM/ A&IE/ HRIDC	
A.S. JANGHU CRE/Elect.		JYOTI SANGWAN DGM/ Elect.	
STIPHEN SAHOO SRE/Elect.			

PROJECT:
HARYANA ORBITAL RAIL CORRIDOR
CONNECTING PALWAL TO SONIPAT BYPASSING DELHI AREA BY LINKING ASAOTI-PATLI-SULTANPUR-ASAUDAH BY NEW ELECTRIFIED BG DOUBLE LINE

CLIENT:
HARYANA RAIL INFRASTRUCTURE DEVELOPMENT CORPORATION LIMITED.

CONSULTANT:
GENERAL CONSULTANT FOR HARYANA ORBITAL RAIL CORRIDOR
RITES Limited in consortium with SMEC International Pty. Ltd.
RITES THE INFRASTRUCTURE PEOPLE | SMEC Member of the Surbana Jurong Group

TITLE:- INDICATIVE DRAWING FOR TSS/ SP/ SSP FENCING AND RETAINING WALL

DRG. NO.	SHEET NO.
GC-HRIDC-SYS1-DRW-ELE-017_A1	

SCALE :	ISSUE DATE	REVISED DATE
AS SHOWN	31.03.2023	08.07.2023

OCC AND TRACTION SCADA ARRANGEMENT FOR PRITHLA - NEW HARSANA KALAN SECTION

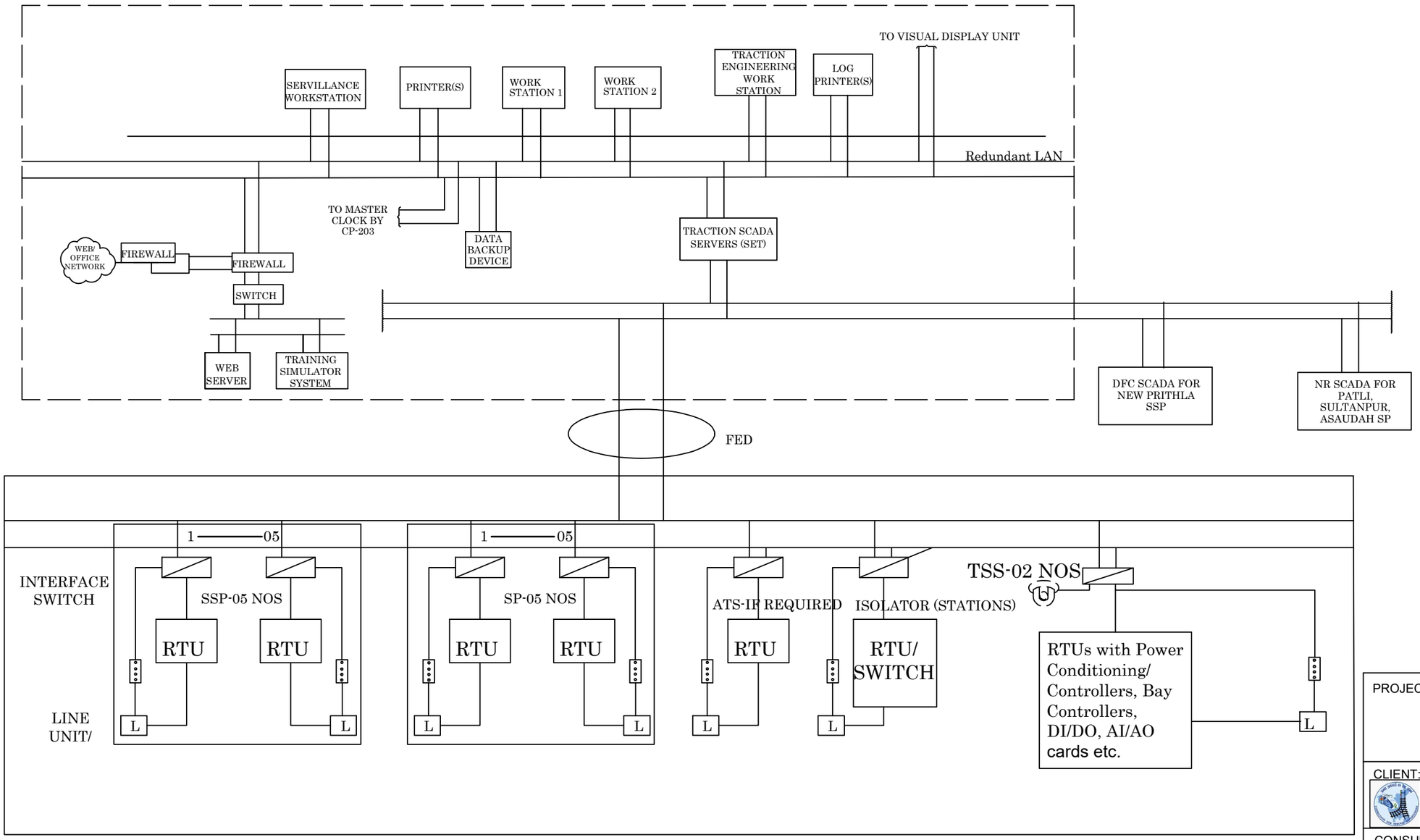

LEGENDS

Communication Line Interface required for connecting SCADA Equipment with OFC ring/Switch

L - FAULT FACTOR

- MODEM

GC/HORC		HRIDC	
NAME / DESIGNATION	SIGN	NAME / DESIGNATION	SIGN
CHAHATEY RAM PD		VIKRAM YADAV GM/ A&IE/ HRIDC	
A.S. JANGHU CRE/Elect.		JYOTI SANGWAN DGM/ Elect.	
STIPHEN SAHOO SRE/Elect.			

PROJECT:
HARYANA ORBITAL RAIL CORRIDOR
CONNECTING PALWAL TO SONIPAT BYPASSING DELHI AREA BY LINKING ASAOTI-PATLI-SULTANPUR-ASAUDAH BY NEW ELECTRIFIED BG DOUBLE LINE

CLIENT:
HARYANA RAIL INFRASTRUCTURE DEVELOPMENT CORPORATION LIMITED.

CONSULTANT:
GENERAL CONSULTANT FOR HARYANA ORBITAL RAIL CORRIDOR
RITES Limited in consortium with SMEC International Pty. Ltd.

RITES THE INFRASTRUCTURE PEOPLE | SMEC Member of the Surbana Jurong Group

TITLE:- INDICATIVE GENERAL ARRANGEMENT BLOCK DIAGRAM FOR TRACTION SCADA CONTROL

DRG. NO.	SHEET NO.
GC-HRIDC-SYS1-DRW-ELE-018_A0	

SCALE :	ISSUE DATE	REVISED DATE
AS SHOWN	31.03.2023	

AUXILIARY SCADA SYSTEM FOR PRITHLA - NEW HARSANA KALAN SECTION

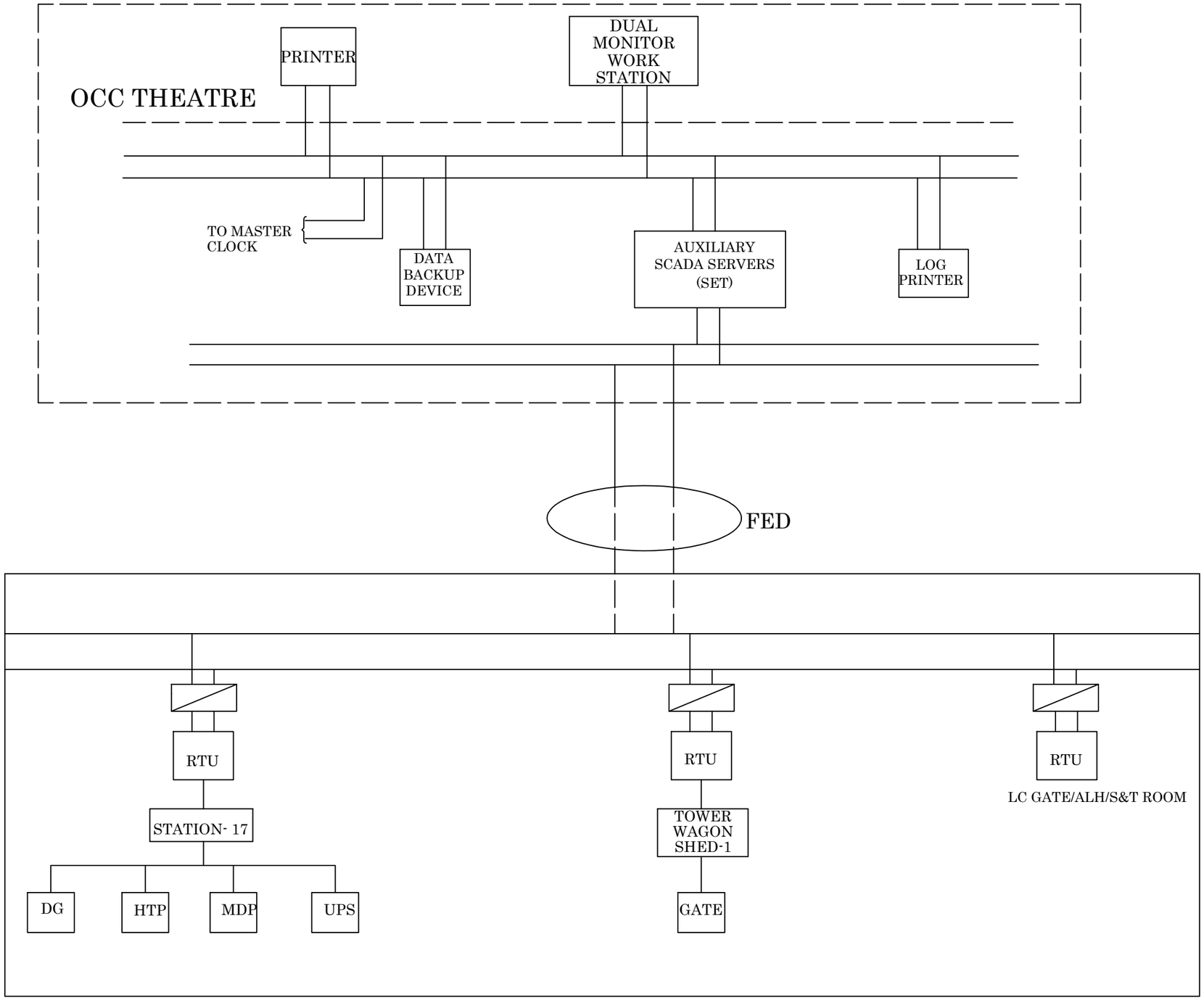

MDP	Main Distribution Panel
DG	Diesel Generator
HTP	High Tension Panel

ion Line Interface as required for connecting SCADA Equipment
ng/switch shall be coordinated by the contractor.

GC/HORC		HRIDC	
NAME / DESIGNATION	SIGN	NAME / DESIGNATION	SIGN
CHAHATEY RAM PD		VIKRAM YADAV GM/ A&IE/ HRIDC	
A.S. JANGHU CRE/Elect.		JYOTI SANGWAN DGM/ Elect.	
STIPHEN SAHOO SRE/Elect.			

PROJECT:
HARYANA ORBITAL RAIL CORRIDOR
CONNECTING PALWAL TO SONIPAT BYPASSING DELHI AREA BY LINKING ASAOTI-PATLI-SULTANPUR-ASAUDAH BY NEW ELECTRIFIED BG DOUBLE LINE

CLIENT:
HARYANA RAIL INFRASTRUCTURE DEVELOPMENT CORPORATION LIMITED.

CONSULTANT:
GENERAL CONSULTANT FOR HARYANA ORBITAL RAIL CORRIDOR
RITES Limited in consortium with SMEC International Pty. Ltd.

TITLE:- INDICATIVE GENERAL ARRANGEMENT BLOCK DIAGRAM FOR AUXILIARY SCADA CONTROL

DRG. NO.	SHEET NO.
GC-HRIDC-SYS1-DRW-ELE-019_A0	

SCALE :	ISSUE DATE	REVISED DATE
AS SHOWN	31.03.2023	

TOWER WAGON SHED PLAN AND ELEVATION

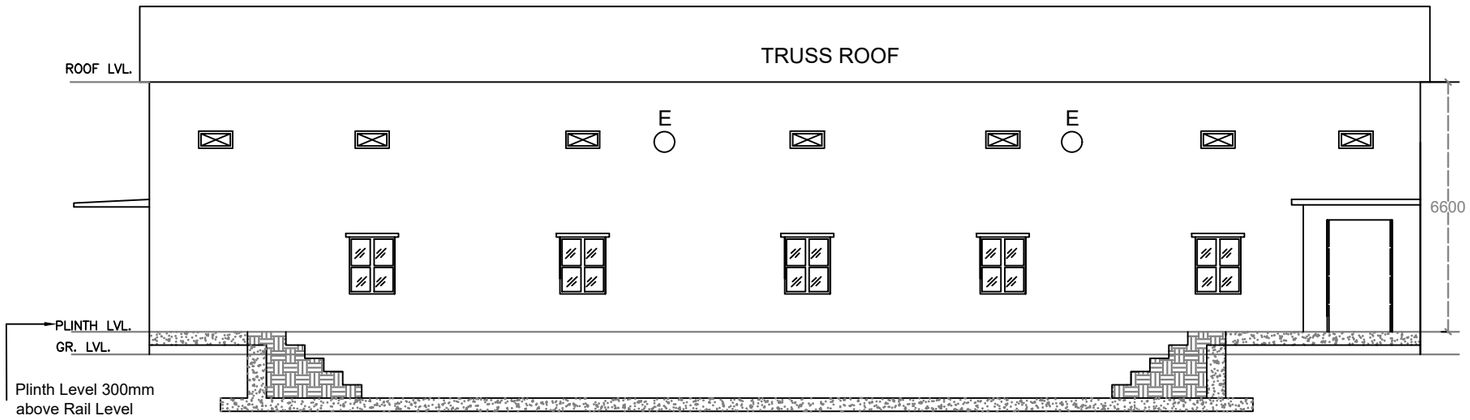

ELEVATION

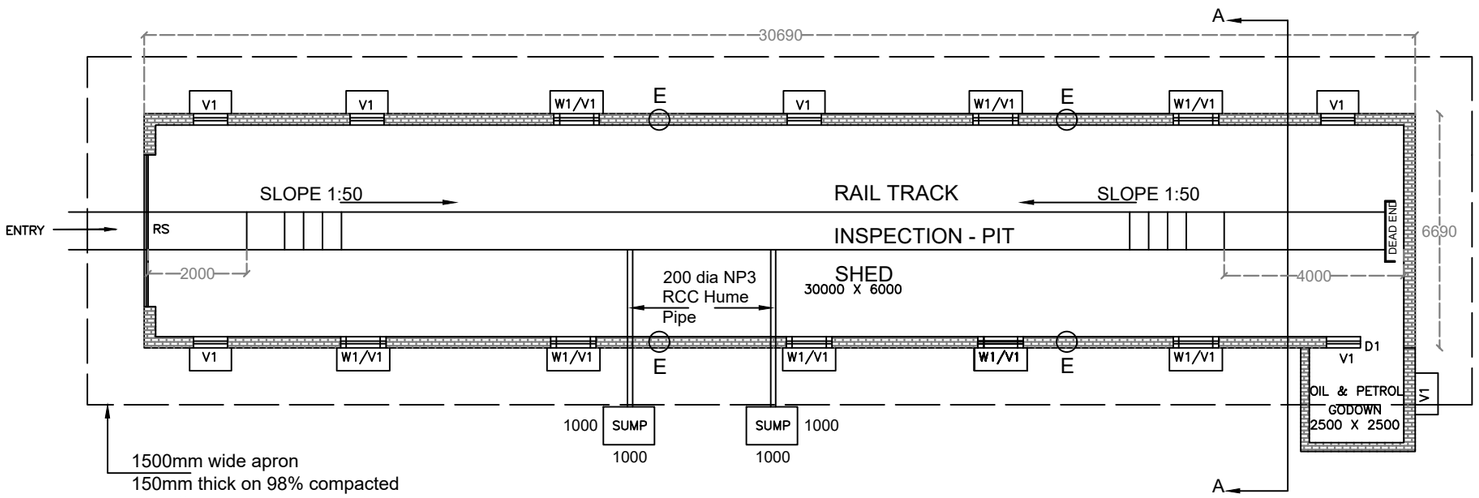

GROUND FLOOR PLAN

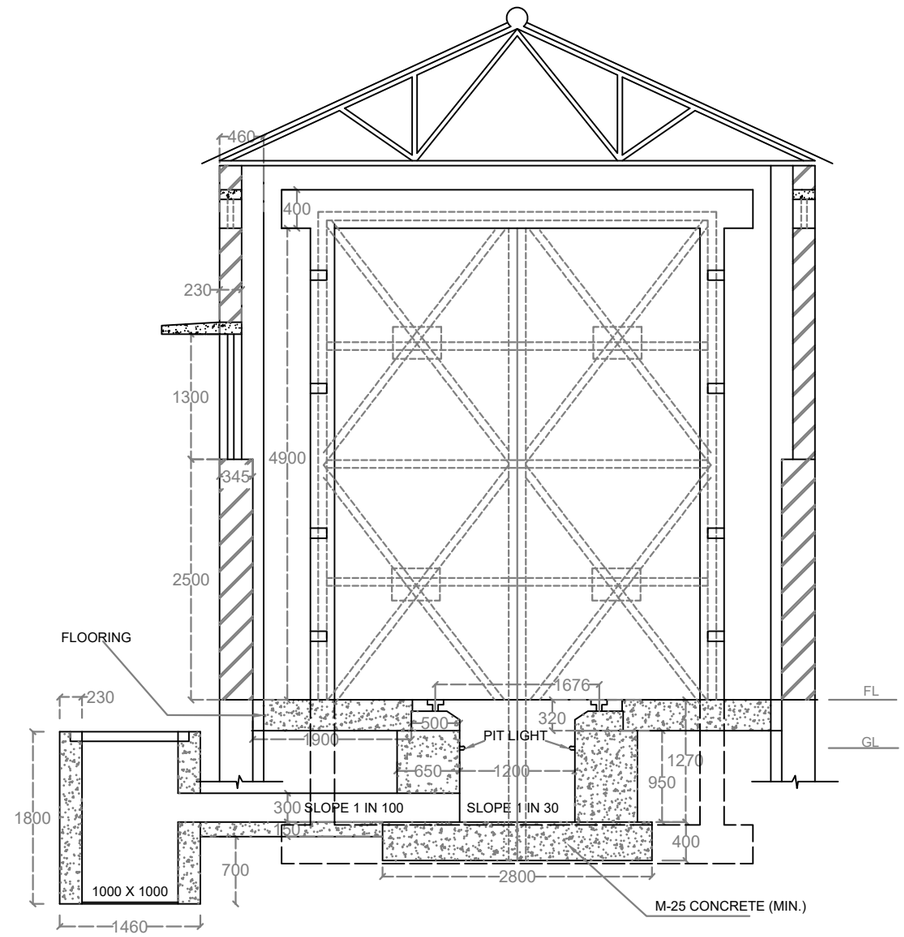

INSPECTION PIT
SECTION A-A

Notes:-

1. All dimensions are in millimeters.
2. This drawing is based on RDSO DRG no. RE/CIVIL/S/142-06.
3. The notes of RDSO drawing shall not be applicable for HORC Tower Wagon shed.
4. Plinth level shall be 300mm above FGL.
5. Cement concrete foundation with M-25 RCC grade to be provided. PCC work shall be done with M-15 grade concrete.
6. Brick work shall be in cement mortar (1:4).
7. Brick work shall be with Class designation-10 (minimum).
8. 110mm dia PVC rain water pipe and 75mm PVC spout.
9. Building shall be cement plastered with 1:4. Inside shall be painted with plastic emulsion paint and outside shall be with water proof paint as approved by the Engineer.
10. Inspection pit shall be designed with RCC M-25 grade.
11. Foundation for Tower wagon shed shall be pile foundation.
12. Spacing of trusses shall be as per design.
13. Heavy duty M-25 CC flooring shall be provided over well compacted (98%) soil.
14. Galvalume sheets of 1mm thick as per IS : 14246 : 1995 shall be provided on roof.
15. Electrical fittings (minimum) shall be; lighting fixtures, exhaust fan, inspection pit light, industrial socket, distribution boards, fans etc.

GC/HORC		HRIDC	
NAME / DESIGNATION	SIGN	NAME / DESIGNATION	SIGN
CHAHATEY RAM PD		VIKRAM YADAV GM/ A&IE/ HRIDC	
A.S. JANGHU CRE/Elect.		JYOTI SANGWAN DGM/ Elect.	
STIPHEN SAHOO SRE/Elect.			

PROJECT:
HARYANA ORBITAL RAIL CORRIDOR
CONNECTING PALWAL TO SONIPAT BYPASSING DELHI AREA BY LINKING ASAOTI-PATLI-SULTANPUR-ASAUDAH BY NEW ELECTRIFIED BG DOUBLE LINE

CLIENT:
HARYANA RAIL INFRASTRUCTURE DEVELOPMENT CORPORATION LIMITED.

CONSULTANT:
GENERAL CONSULTANT FOR
HARYANA ORBITAL RAIL CORRIDOR
RITES Limited in consortium with SMEC International Pty. Ltd.

RITES THE INFRASTRUCTURE PEOPLE | SMEC Member of the Surbana Jurong Group

TITLE:- INDICATIVE PLAN ELEVATION FOR TOWER WAGON SHED AND INSPECTION PIT

DRG. NO.	SHEET NO.
GC-HRIDC-SYS1-DRW-ELE-020_A1	

SCALE :	ISSUE DATE	REVISED DATE
AS SHOWN	31.03.2023	08.07.2023

CABLE PATH IN OPEN

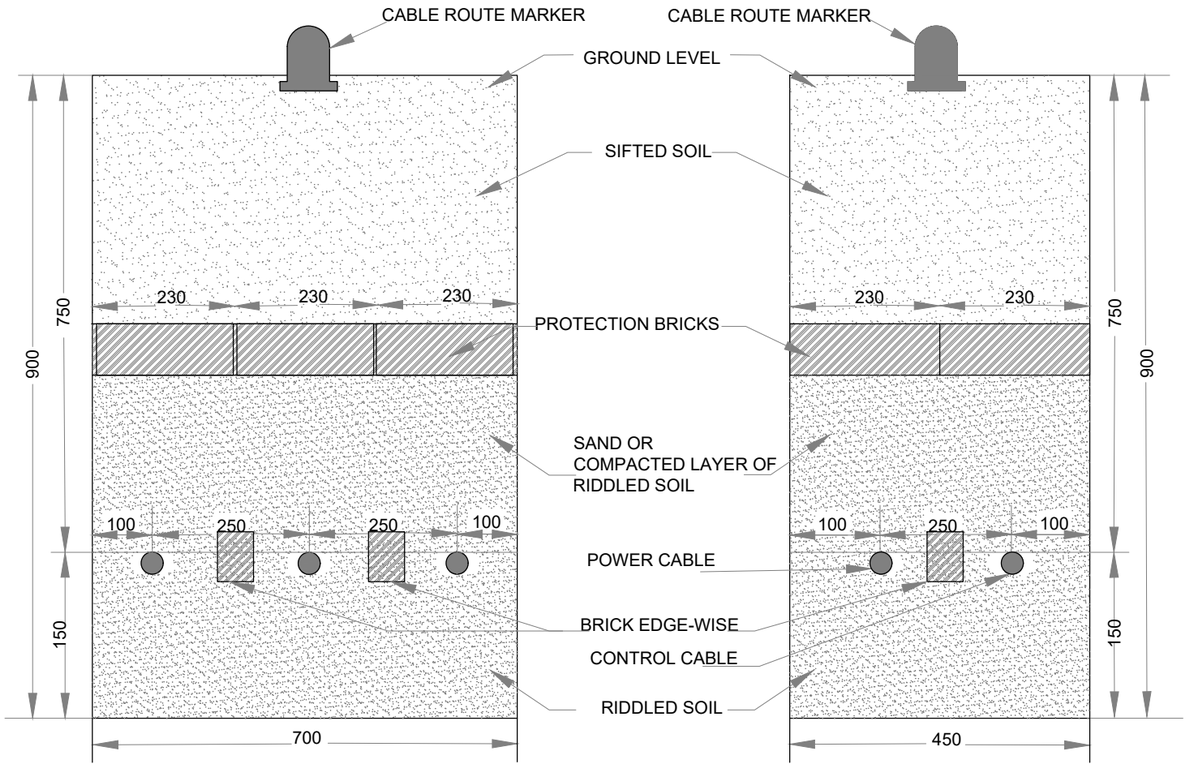

CABLE PATH IN OPEN

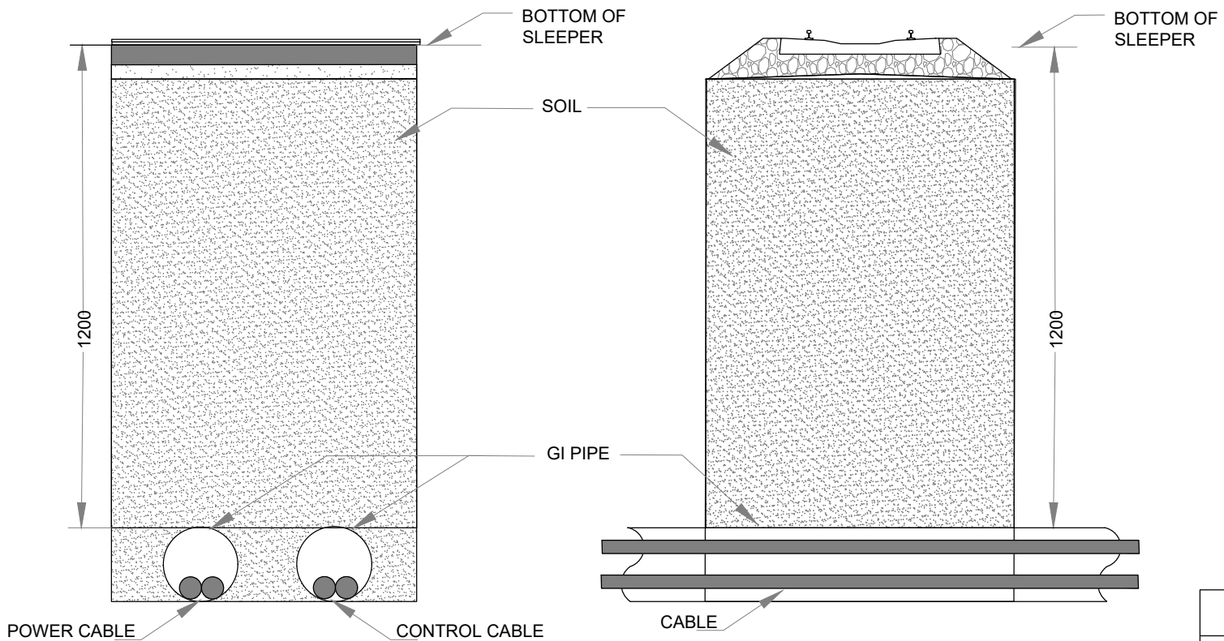

NOTE:

1. ALL DIMENSIONS ARE IN MILLIMETRE.
2. ROUTE MARKER SHALL BE PROVIDED AT EVERY 100m AND ON CHANGE OF DIRECTION OF CABLE ROUTE.
3. FOR TRACK CROSSING GI PIPE 75mm DIA (MIN.) SHALL BE USED.
4. FOR CABLES PASSING BELOW FLOOR, ROAD, PLATFORM ETC HDPE PIPE 63mm DIA (MIN.) PN4 SHALL BE USED.

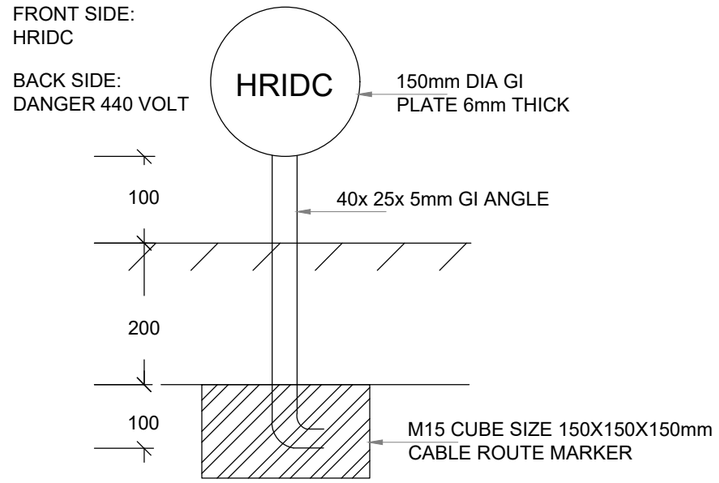

ACROSS THE TRACK

ACROSS THE TRACK

GC/HORC		HRIDC	
NAME / DESIGNATION	SIGN	NAME / DESIGNATION	SIGN
CHAHATEY RAM PD		VIKRAM YADAV GM/ A&IE/ HRIDC	
A.S. JANGHU CRE/Elect.		JYOTI SANGWAN DGM/ Elect.	
STIPHEN SAHOO SRE/Elect.			

PROJECT:
HARYANA ORBITAL RAIL CORRIDOR
CONNECTING PALWAL TO SONIPAT BYPASSING DELHI AREA BY LINKING ASAOTI-PATLI-SULTANPUR-ASAUDAH BY NEW ELECTRIFIED BG DOUBLE LINE

CLIENT:
HARYANA RAIL INFRASTRUCTURE DEVELOPMENT CORPORATION LIMITED.

CONSULTANT:
GENERAL CONSULTANT FOR
HARYANA ORBITAL RAIL CORRIDOR
RITES Limited in consortium with SMEC International Pty. Ltd.

RITES THE INFRASTRUCTURE PEOPLE | SMEC Member of the Surbana Jurong Group

TITLE:- INDICATIVE CABLE ROUTE PLAN FOR MOTORISED ISOLATOR

DRG. NO.	SHEET NO.
GC-HRIDC-SYS1-DRW-ELE-021_A0	

SCALE :	ISSUE DATE	REVISED DATE
AS SHOWN	31.03.2023	

Haryana Orbital Rail Corridor
Indicative Traction Line Diagram

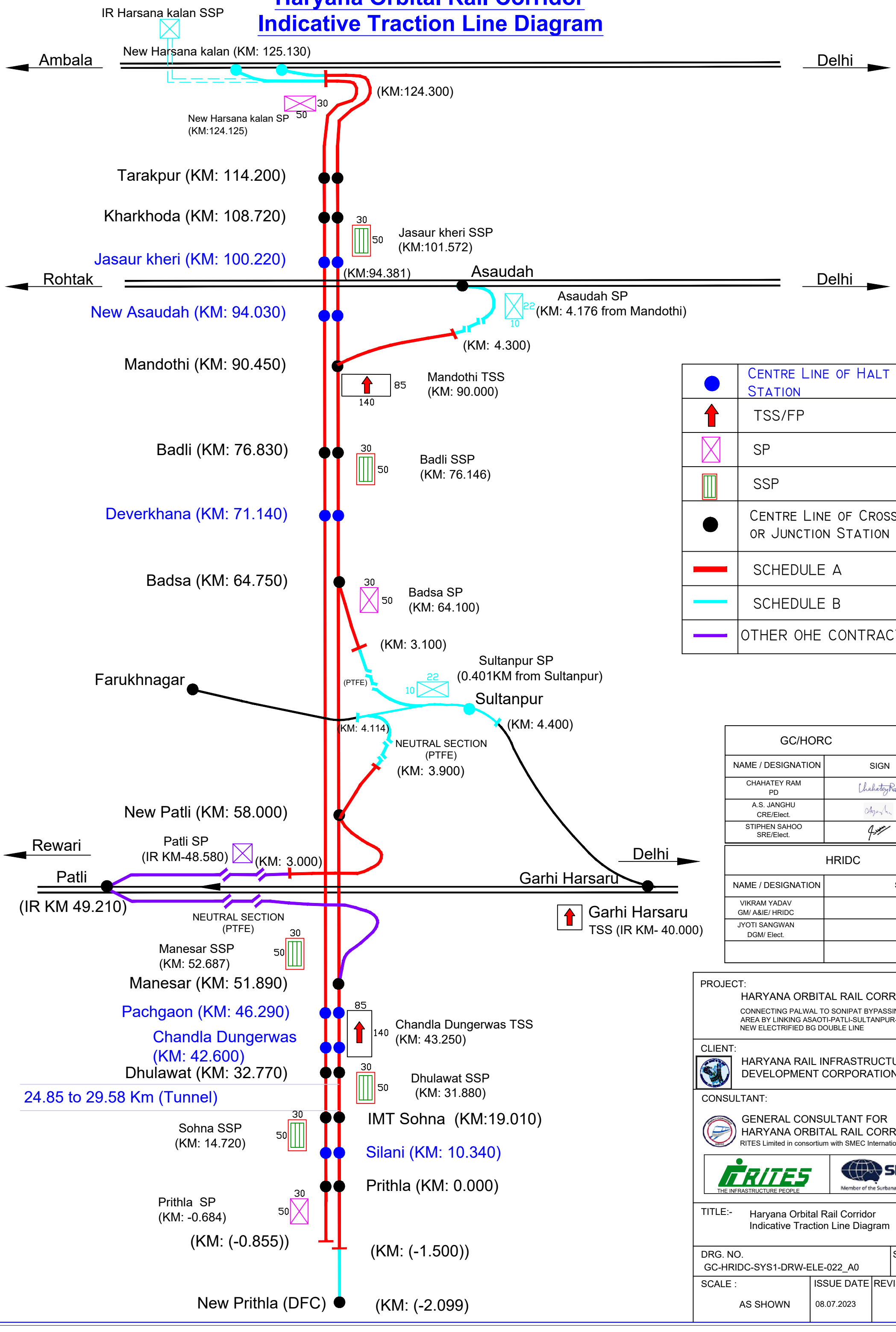

	CENTRE LINE OF HALT STATION
	TSS/FP
	SP
	SSP
	CENTRE LINE OF CROSSING OR JUNCTION STATION
	SCHEDULE A
	SCHEDULE B
	OTHER OHE CONTRACTOR

GC/HORC	
NAME / DESIGNATION	SIGN
CHAHATEY RAM PD	
A.S. JANGHU CRE/Elect.	
STIPHEN SAHOO SRE/Elect.	

HRIDC	
NAME / DESIGNATION	SIGN
VIKRAM YADAV GM/ A&IE/ HRIDC	
JYOTI SANGWAN DGM/ Elect.	

PROJECT:
HARYANA ORBITAL RAIL CORRIDOR
CONNECTING PALWAL TO SONIPAT BYPASSING DELHI AREA BY LINKING ASAOTI-PATLI-SULTANPUR-ASAUDAH BY NEW ELECTRIFIED BG DOUBLE LINE

CLIENT:
HARYANA RAIL INFRASTRUCTURE DEVELOPMENT CORPORATION LIMITED.

CONSULTANT:
GENERAL CONSULTANT FOR
HARYANA ORBITAL RAIL CORRIDOR
RITES Limited in consortium with SMEC International Pty. Ltd.

RITES THE INFRASTRUCTURE PEOPLE | SMEC Member of the Surbana Jurong Group

TITLE:- Haryana Orbital Rail Corridor
Indicative Traction Line Diagram

DRG. NO.	SHEET NO.
GC-HRIDC-SYS1-DRW-ELE-022_A0	

SCALE :	ISSUE DATE	REVISED DATE
AS SHOWN	08.07.2023	

INDICATIVE PORTAL ARRANGEMENT IN MANESAR STATION YARD AND MANESAR - PATLI OPEN ROUTE

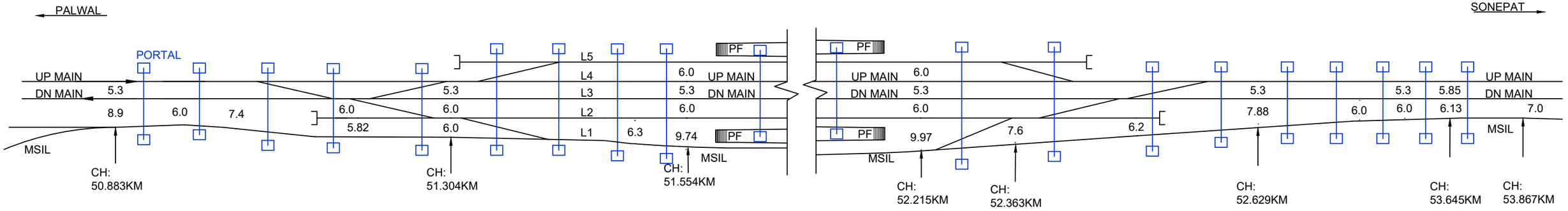

NOTE:
1. THE LOCATIONS OF PORTALS SHOWN ARE INDICATIVE ONLY.

GC/HORC		HRIDC	
NAME / DESIGNATION	SIGN	NAME / DESIGNATION	SIGN
CHAHATEY RAM PD		VIKRAM YADAV GM/ A&IE/ HRIDC	
A.S. JANGHU CRE/Elect.		JYOTI SANGWAN DGM/ Elect.	
STIPHEN SAHOO SRE/Elect.			

PROJECT:
HARYANA ORBITAL RAIL CORRIDOR
CONNECTING PALWAL TO SONIPAT BYPASSING DELHI AREA BY LINKING ASAOTI-PATLI-SULTANPUR-ASAUDAH BY NEW ELECTRIFIED BG DOUBLE LINE

CLIENT:
HARYANA RAIL INFRASTRUCTURE DEVELOPMENT CORPORATION LIMITED.

CONSULTANT:
GENERAL CONSULTANT FOR
HARYANA ORBITAL RAIL CORRIDOR
RITES Limited in consortium with SMEC International Pty. Ltd.

RITES THE INFRASTRUCTURE PEOPLE | SMEC Member of the Surbana Jurong Group

TITLE:- INDICATIVE PORTAL ARRANGEMENT IN MANESAR STATION YARD AND MANESAR - PATLI OPEN ROUTE

DRG. NO.	SHEET NO.
GC-HRIDC-SYS1-DRW-ELE-023_A0	

SCALE :	ISSUE DATE	REVISED DATE
AS SHOWN	31.03.2023	

B. Civil Drawings

HORIZONTAL ALIGNMENT	L=501.536m; TRL=140m; R =-850m; TRL=140m; L=283.152m
VERTICAL ALIGNMENT	L=310.000m 1 IN 1241 R; L=20.000m R=27720.08m; L=324.000m 1 IN 11862 R; L=20.000m R=8782.40m; L=576.000m 1 IN 456 F; L=20.000m R=-9120.02m; L=140.000m LEVEL; L=20.000m R=-241.00m; L=283.152m 1 IN 200 R
DEPTH OF CUTTING (-) HIGHT OF BANKING (+)	+3.136 +3.360 +3.438 +3.460 +3.333 +3.241 +3.158 +3.160 +3.328 +3.764 +5.145 +6.985 +8.108 +9.370 +10.636 +7.315 +6.247 +3.672 +3.619 +3.459 +3.360 +3.284 +3.272 +3.352 +3.368 +3.614 +4.224 +4.947 +5.633 +6.500 +8.734 +8.740 +8.581 +8.538 +8.508 +8.511 +8.539 +8.424 +8.254 +7.969 +7.771 +7.783 +7.725 +7.677 +7.701 +7.660 +7.707 +7.618 +7.712 +7.710 +7.652 +7.649 +7.623 +8.243 +8.012 +7.822 +7.759 +7.668 +7.329 +7.404 +7.321 +7.270 +6.966 +8.207 +6.471 +7.653 +7.531 +7.493 +7.393 +7.571 +7.658 +7.696
PROPOSED RAIL LEVEL	
PROPOSED FORMATION LEVEL	203.193 203.209 203.225 203.241 203.257 203.290 203.306 203.322 203.354 203.370 203.386 203.402 203.419 203.434 203.440 203.442 203.443 203.445 203.447 203.449 203.450 203.452 203.454 203.455 203.457 203.459 203.460 203.462 203.463 203.464 203.465 203.467 203.444 203.400 203.356 203.312 203.268 203.224 203.181 203.137 203.093 203.049 203.005 202.961 202.917 202.874 202.830 202.786 202.742 202.698 202.654 202.610 202.567 202.523 202.479 202.435 202.391 202.347 202.303 202.260 202.216 202.172 202.161 202.161 202.161

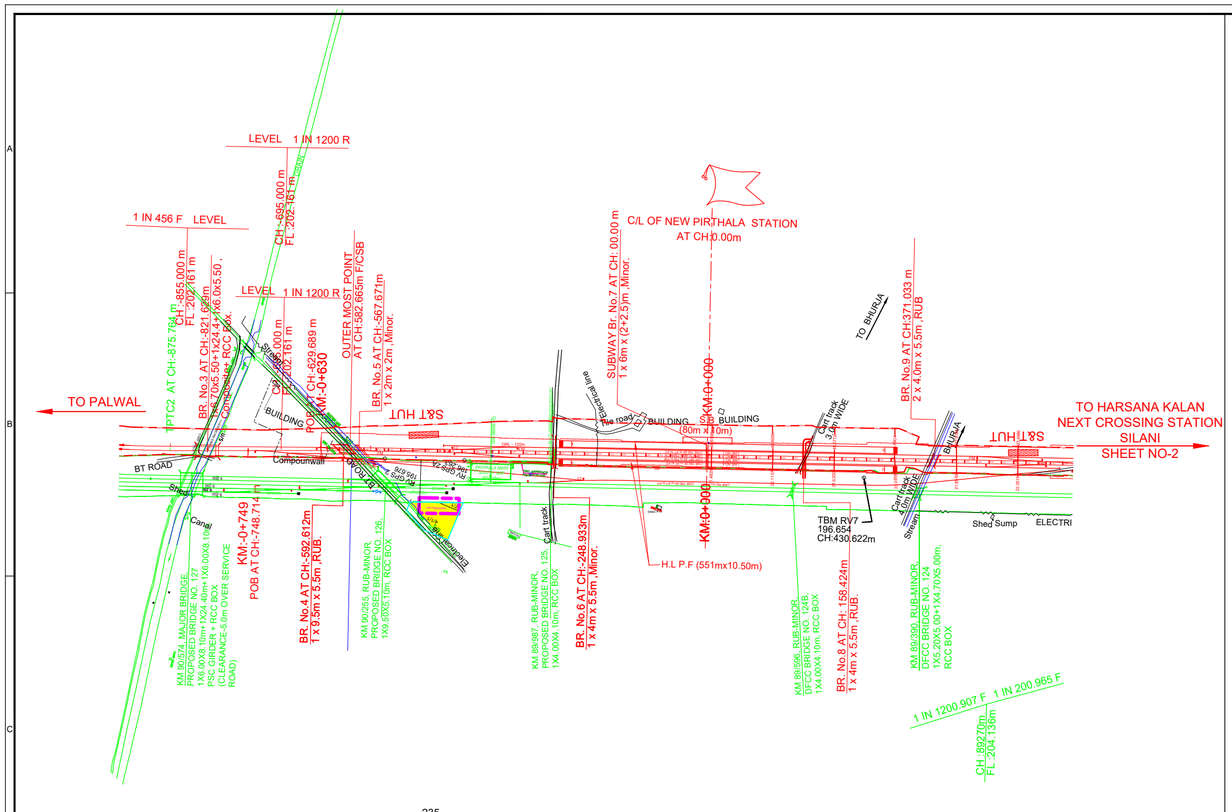
LEVEL 1 IN 1200 R
1 IN 456 F LEVEL
CH:-695.000 m
FL 202.161 m
CH:-855.000 m
FL 202.161 m
LEVEL 1 IN 1200 R
CH:-695.000 m
FL 202.161 m
CH:-829.689 m
POINT KM:-0+630
OUTER MOST POINT
AT CH:582.865m F/CSB
BR. No.5 AT CH:-567.671m
1 x 2m x 2m ,Minor.
SUBWAY Br. No.7 AT CH: 00.00 m
1 x 6m x (2+2.5)m ,Minor.
C/L OF NEW PIRTHALA STATION
AT CH:0.00m
KM:0+000
KM:0+000
BR. No.9 AT CH:371.033 m
2 x 4.0m x 5.5m ,RUB
TO BHURJA
TO PALWAL
TO HARSANA KALAN
NEXT CROSSING STATION
SILANI
SHEET NO-2
SAT HUT
SAT HUT
BUILDING
BUILDING
SR BUILDING
(80m x 10m)
Compound wall
BT ROAD
Canal
Stream
Shed Sump
ELECTRI
BR. No.3 AT CH:-821.568m
1 x 3 x 3.70x5.50+1x24.4+4x6.0x5.50+
1 x 3.70x5.50+1x24.4+4x6.0x5.50
RCC Box.
Construction
BR. No.4 AT CH:-592.612m
1 x 9.5m x 5.5m ,RUB.
KM:-0+749
POB AT CH:-748.714
KM 89/855, RUB-MINOR,
PROPOSED BRIDGE NO. 126,
1X9.00X5.10m, RCC BOX
KM 89/987, RUB-MINOR,
PROPOSED BRIDGE NO. 125,
1X4.00X4.10m, RCC BOX
BR. No.6 AT CH:-248.933m
1 x 4m x 5.5m ,Minor.
H.L P.F (551mx10.50m)
TBM RV7
196.654
CH:430.622m
KM 89/996, RUB-MINOR,
DFCC BRIDGE NO. 1248
1X4.00X4.10m, RCC BOX
BR. No.8 AT CH:-158.424m
1 x 4m x 5.5m ,RUB.
KM 89/390, RUB-MINOR,
DFCC BRIDGE NO. 124
1 X5.50+2X5.50+1 X4.70X5.00m,
RCC BOX
1 IN 1200.907 F
1 IN 200.965 F
CH:-892.70m
FL 204.135m
KM 89/1227, RUB-MINOR,
PROPOSED BRIDGE NO. 127,
1X6.00X8.10m+1X24.40m+1X6.00X8.10m,
PSC GIRDER + RCC BOX
(CLEARANCE-5.0m OVER SERVICE
ROAD)
Km 89/1227
Km 89/1227
Km 89/1227

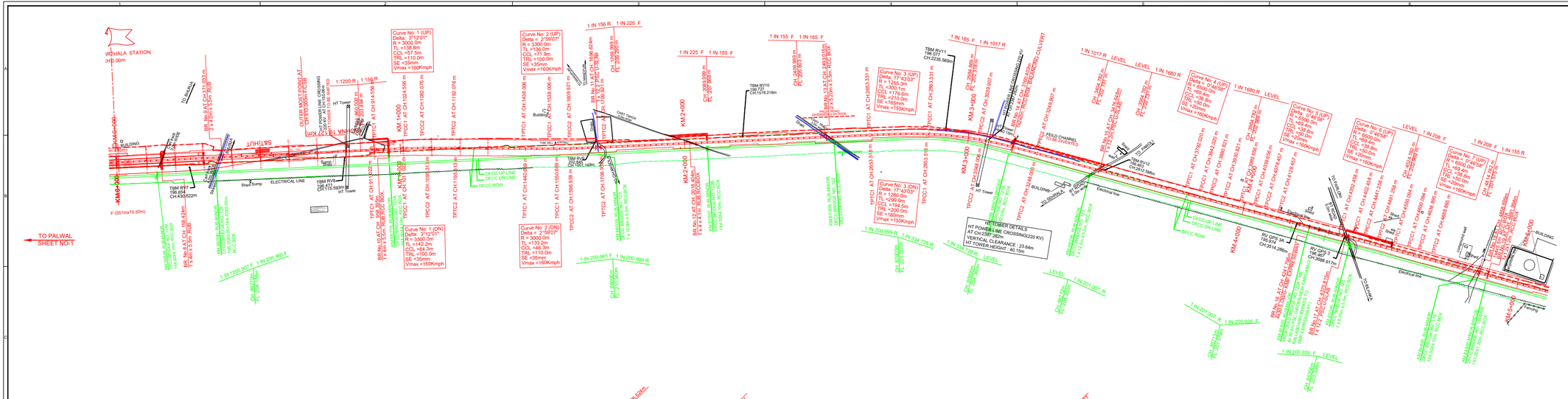
IRCHALA STATION
KM 0.000
TO PALWAL
SHEET NO-1
TO HARSANA KALAN
NEXT CROSSING STATION
SILANI
SHEET NO-3
HT TOWER DETAILS
AT CH:2587.385m
VERTICAL CLEARANCE : 23.64m
HT TOWER HEIGHT : 40.15m
Curve No: 1 (UP)
Delta : 3°12'01"
R = 3000.0m
TL =138.8m
CCL =57.5m
TRL =110.0m
SE =35mm
Vmax =160Kmph
Curve No: 2 (UP)
Delta = 2°59'07"
R = 3300.0m
TL =129.9m
CCL =71.9m
TRL =100.0m
SE =35mm
Vmax =160Kmph
Curve No: 3 (UP)
Delta : 12°43'03"
R = 1260.0m
TL =209.1m
CCL =117.1m
TRL =218.0m
SE =160mm
Vmax =150Kmph
Curve No: 4 (UP)
Delta : 7°45'00"
R = 850.0m
TL =57.6m
CCL =38.0m
TRL =200.0m
SE =90mm
Vmax =160Kmph
Curve No: 5 (UP)
R = 850.0m
TL =57.6m
CCL =38.0m
TRL =200.0m
SE =90mm
Vmax =160Kmph
Curve No: 6 (UP)
Delta : 7°45'00"
R = 850.0m
TL =57.6m
CCL =38.0m
TRL =200.0m
SE =90mm
Vmax =160Kmph
Curve No: 7 (UP)
Delta = 6°45'00"
R = 850.0m
TL =50.0m
CCL =33.8m
TRL =200.0m
SE =90mm
Vmax =160Kmph
Curve No: 1 (DN)
Delta : 3°12'01"
R = 3300.0m
TL =142.2m
CCL =64.3m
TRL =100.0m
SE =35mm
Vmax =150Kmph
Curve No: 2 (DN)
Delta = 2°59'07"
R = 3000.0m
TL =142.2m
CCL =71.9m
TRL =100.0m
SE =35mm
Vmax =160Kmph
1 IN 156 R
1 IN 225 F
1 IN 155 F
1 IN 165 F
1 IN 1017 R
1 IN 1017 LEVEL
LEVEL
1 IN 1680 R
1 IN 1680 LEVEL
1 IN 208 F
1 IN 155 R
1 IN 200.965 F
1 IN 200.999 R
1 IN 200.926 F
1 IN 291.007 R
1 IN 1200.999 F
1 IN 200.965 F
1 IN 534.728 R
1 IN 344.728 R
1 IN 291.007 R
1:1200 R
1:156 R
KM 1+000
KM 2+000
KM 3+000
KM 4+000
KM 5+000
KM 6+000
KM 7+000
KM 8+000
KM 9+000
KM 10+000
KM 11+000
KM 12+000
KM 13+000
KM 14+000
KM 15+000
KM 16+000
KM 17+000
KM 18+000
KM 19+000
KM 20+000
KM

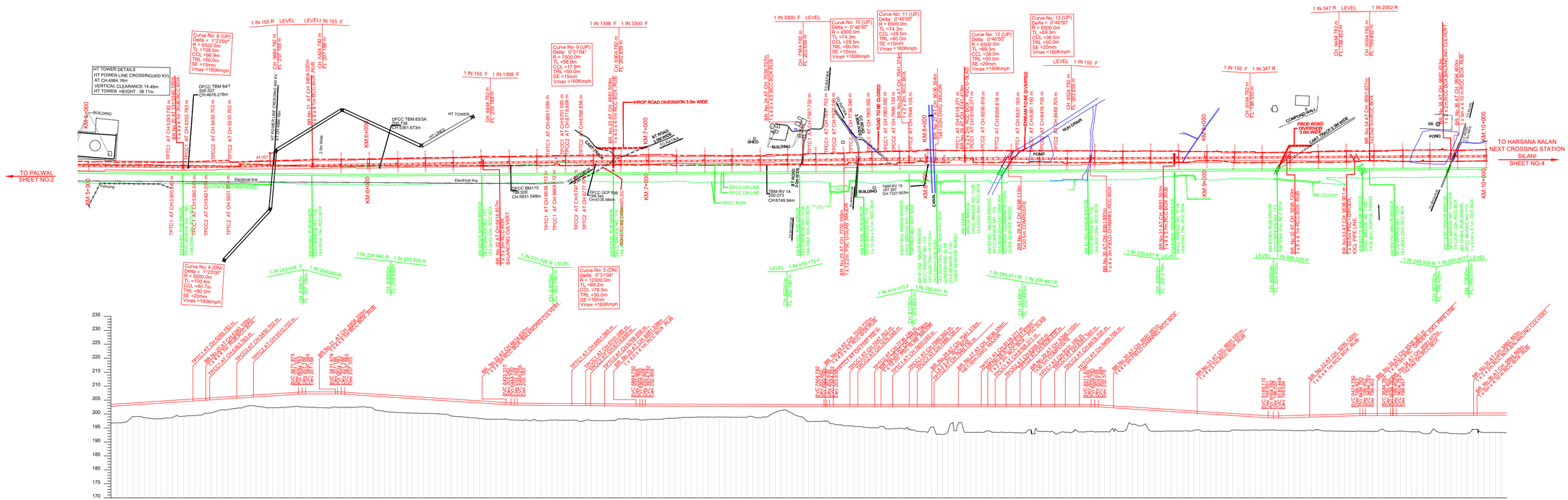
HT TOWER DETAILS
HT POWER LINE CROSSING(400 KV)
AT CH 4984.16m
VERTICAL CLEARANCE 14.48m
HT TOWER HEIGHT : 38.11m
TO PALWAL SHEET NO-2
TO HARSANA KALAN NEXT CROSSING STATION SILANI SHEET NO-4
Curve No: 8 (UP) Delta = 1°23'00" R = 6500.0m TL =108.5m CCL =96.9m TRL =60.0m SE =15mm Vmax =160Kmph
Curve No: 9 (UP) Delta: 0°31'04" R = 7500.0m TL =58.9m CCL =17.8m TRL =50.0m SE =15mm Vmax =160Kmph
Curve No: 10 (UP) Delta = 0°46'50" R = 6500.0m TL =74.3m CCL =28.5m TRL =60.0m SE =15mm Vmax =160Kmph
Curve No: 11 (UP) Delta: 0°46'50" R = 6500.0m TL =74.3m CCL =28.5m TRL =60.0m SE =15mm Vmax =160Kmph
Curve No: 12 (UP) Delta: 0°46'50" R = 6500.0m TL =69.3m CCL =38.5m TRL =50.0m SE =20mm Vmax =160Kmph
Curve No: 13 (UP) Delta = 0°46'50" R = 6500.0m TL =69.3m CCL =38.5m TRL =50.0m SE =20mm Vmax =160Kmph
Curve No: 4 (DN) Delta = 1°23'00" R = 5000.0m TL =100.4m CCL =40.7m TRL =60.0m SE =20mm Vmax =160Kmph
Curve No: 5 (DN) Delta: 0°31'04" R = 12500.0m TL =113.1m CCL =78.5m TRL =30.0m SE =10mm Vmax =160Kmph
PROP ROAD DIVERSION 3.0m WIDE
PROP ROAD DIVERSION 10m WIDE
CART TRACK 6M WIDE
STREAM TO BE DIVERTED
POND
COMPOUND WALL
BUILDING
SHED
DFCC UP LINE
DFCC DN LINE
DFCC ROW
Electrical line
Fencing
2.5m Wide
HT TOWER
HT LINES
1 IN 155 R LEVEL
1 IN 155 F
1 IN 1398 F
1 IN 3300 F
1 IN 347 R
1 IN 2002 R
1 IN 204.940 R
1 IN 201.526 R
1 IN 243.934 F
1 IN 201.526 R LEVEL
1 IN 419.173 F
1 IN 285.611 R
1 IN 200.487 R
1 IN 449.529 R
1 IN 249.529 R
1 IN 200.922 F LEVEL
KM 5+000
KM 6+000
KM 7+000
KM 8+000
KM 9+000
KM 10+000
TPTC1 AT CH 5300.840m
TPTC2 AT CH 5421.840m
TPTC1 AT CH 5601.840m
TPTC2 AT CH 5570.702m
TPTC1 AT CH 6639.127m
TPTC2 AT CH 6658.127m
TPTC1 AT CH 6851.085m
TPTC2 AT CH 6718.858m
TPTC1 AT CH 7387.702m
TPTC2 AT CH 7387.246m
TPTC1 AT CH 7736.246m
TPTC2 AT CH 7736.246m
TPTC1 AT CH 7800.592m
TPTC2 AT CH 7889.136m
TPTC1 AT CH 8206.816m
TPTC2 AT CH 8256.816m
TPTC1 AT CH 8531.160m
TPTC2 AT CH 8381.160m
TPTC1 AT CH 8419.705m
TPTC2 AT CH 8459.705m
TPTC1 AT CH 8118.271m
TPTC2 AT CH 8168.271m
TPTC1 AT CH 8168.271m
TPTC2 AT CH 8206.271m
TPTC1 AT CH 7949.136m
TPTC2 AT CH 8006.354m
TPTC1 AT CH 7708.198m
TPTC2 AT CH 7708.198m
AM 83/120, RUB MINOR BRIDGE DFCC BRIDGE NO. 110A 1X12.00M+10m, RCC BOX
AM 83/121, RUB MINOR BRIDGE DFCC BRIDGE NO. 111 1X12.00M+10m, RCC BOX
AM 83/122, RUB MINOR BRIDGE DFCC BRIDGE NO. 112 1X12.00M+10m, RCC BOX
AM 83/123, RUB MINOR BRIDGE DFCC BRIDGE NO. 113 1X12.00M+10m, RCC BOX
AM

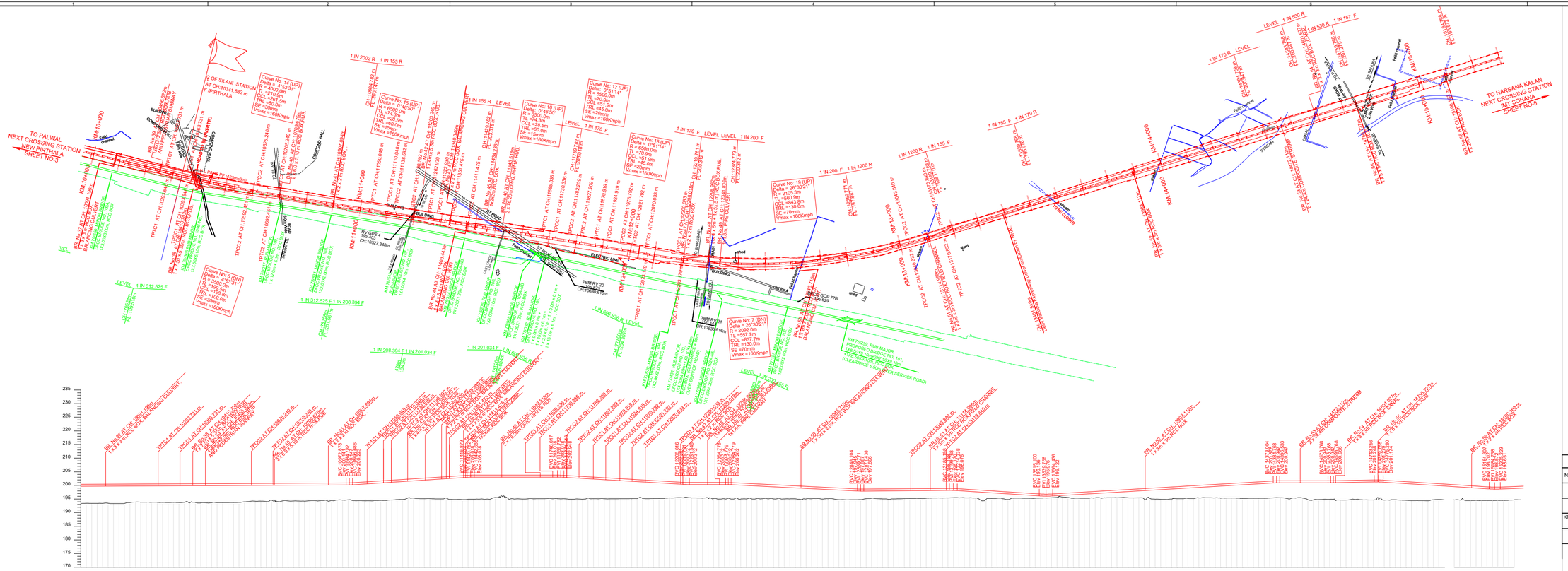
TO PALWAL
NEXT CROSSING STATION
NEW PIRTHALA
SHEET NO-3
TO HARSANA KALAN
NEXT CROSSING STATION
SH. SOHANA
SHEET NO-5
KM 10+000
KM 11+000
KM 12+000
KM 13+000
KM 14+000
KM 15+000
KM 16+000
KM 17+000
KM 18+000
KM 19+000
KM 20+000
KM 21+000
KM 22+000
KM 23+000
KM 24+000
KM 25+000
KM 26+000
KM 27+000
KM 28+000
KM 29+000
KM

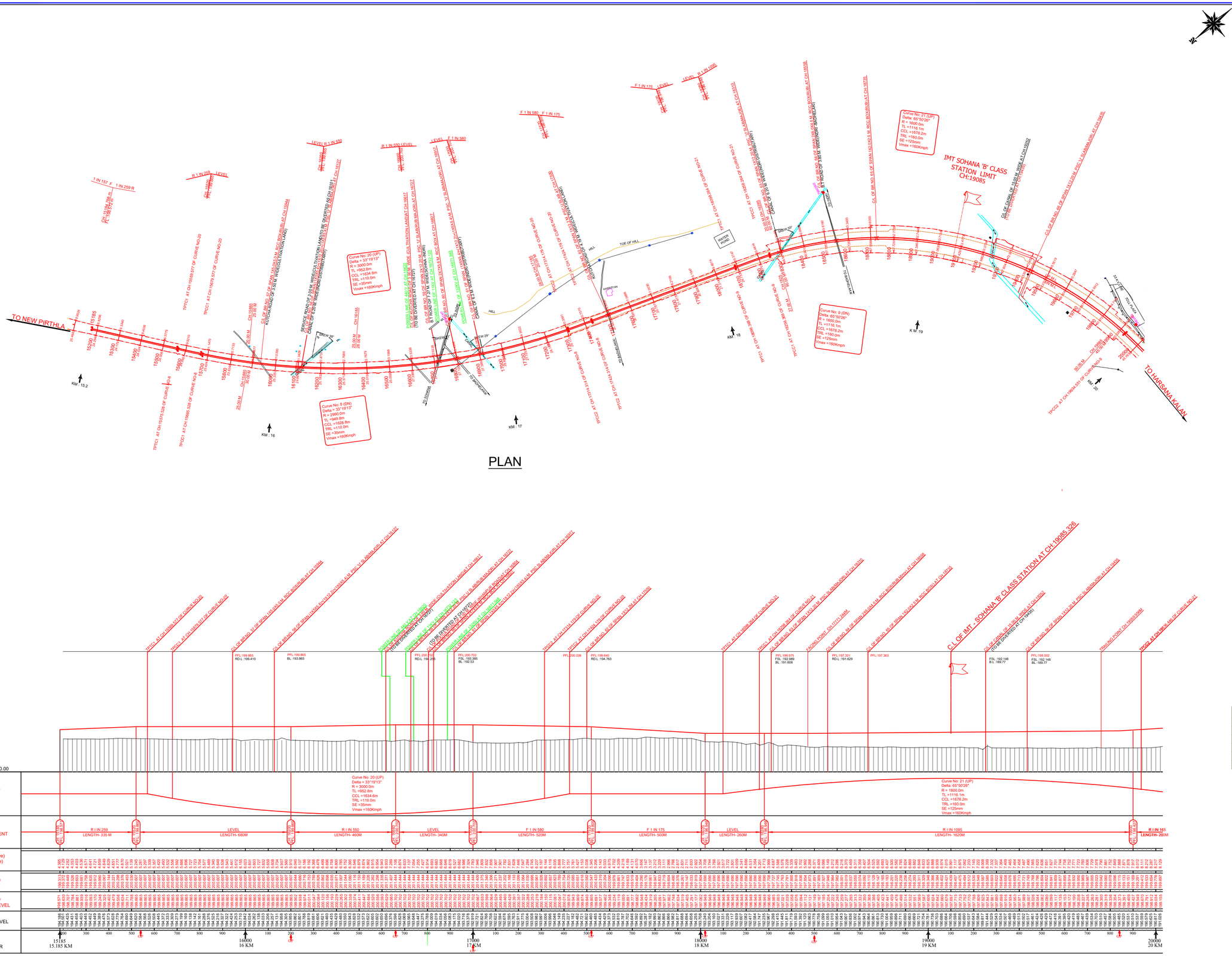

NOTES :-

1. EXISTING WORK SHOWN IN BLACK.
2. PROPOSED WORK SHOWN IN RED.
3. ALL DIMENSIONS ARE IN METER UNLESS OTHERWISE SPECIFIED.
4. CHAINAGE IS RECKONED 0.00 FROM C.L OF NEW PRITHLA STATION BUILDING .
5. RAIL LEVEL SHOULD BE 0.742m ABOVE FORMATION LEVEL FOR TRACK STRUCTURE 60KG NEW RAIL ON PSC SLEEPER (1660/KM) WITH 350mm BALLAST CUSHION.
6. RULLING GRADIENT IS 1 IN 150 OF THIS SECTION.(COMPENSATED)
7. VERTICAL CURVE WILL BE PROVIDED AS PER IRPWM PARA 419.
8. CROSS / LONGITUDINAL DRAINAGE ARRANGEMENT BET.TRACK SHOULD BE PROVIDED WHEREVER REQUIRED .
9. TROLLY REFUDGE IN BANKING / CUTTING SHALL BE PROVIDED AS PER PROVISION OF IRPWM.
10. STANRDARD OF LOADING (FOR PROP. LINE):- 32.5 T LOADING-2008 & HIGH RISE OHE.
11. TELEPHONE CABLE TO BE LAID FOR TELECOMMUNICATION.
12. ALL ELECTRICAL X-ING WILL BE AS PER PARA II (I) OF CHAPTER I GENERAL OF SCHEDULE 1 OF SOD 2004.

LIST OF TBM

TBM No.	Easting	Northing	Elevation
SM-1	705588.878	3121113.675	194.387
SM-2	704954.348	3119500.444	193.724
SM-3	703625.564	3118824.368	193.601

LEGEND

EXISTING CENTRE LINE	
PROPOSED CENTRE LINE	
DFC CENTRE LINE	
EXISTING TPTC	
PROPOSED TPTC	
TBM	
KM-STONE	
PROPOSED BOUNDARY	
EXISTING BRIDGE	
PROPOSED BRIDGE	
NALA,CANAL,DRAIN	
PERMANENT STRUCTURE	
TEMPORARY STRUCTURE	
PROPOSED GATE LODGE	
TOE LINE	
ROAD	
POWER LINE WITH POLE	
PYLON	
EMBANKMENT / BUND	
ROCKY AREA	
COMPOUND WALL	
DITCH / QUARRY	
BARBED WIRE FENCING	
GROUND LEVEL	

GC/HORC		HRIDC	
NAME /DESIGNATION	SIGN	NAME /DESIGNATION	SIGN
CHAHATEY RAM JE		SHIV OM DWIVEDI DM/HRIDC	
SUDHIR AGRAWAL SR/DEN/A		RAJU SOLANKI DGM/CIVIL/SOUTH	
KRISHAN CHAND SAINSI CRI/CIVIL			

NORTHERN RAILWAY

DELHI DIVISION

PROJECT:

HARYANA ORBITAL RAIL CORRIDOR

CONNECTING PALWAL TO SONIPAT BYPASSING DELHI AREA BY LINKING ASAOTI-PATLI-SULTANPUR-ASAUDAH BY NEW ELECTRIFIED BG DOUBLE LINE

CLIENT:

HARYANA RAIL INFRASTRUCTURE DEVELOPMENT CORPORATION LIMITED.

GENERAL CONSULTANT:

GENERAL CONSULTANT FOR HARYANA ORBITAL RAIL CORRIDOR

RITES Limited in consortium with SMEC International Pty. Ltd.

SIGN

RITES THE INFRASTRUCTURE PEOPLE

SMEC BUILDING A BETTER WORLD

DRAWING NAME	CONCEPTUAL PLAN AND LONGITUDINAL SECTION FROM CHAINAGE 15.185KM TO CHAINAGE 20.00KM
GC/HORC DRG. NO.:-	GC-HRIDC-ALL-DRW-ALN-P&P-15-20KM_A2
ISSUE DATE:	07.11.2022 REVISED DATE: 01.03.2023
SCALE	HORIZONTAL 1:5000 VERTICAL 1:500
SMC DRG. NO.:-	SMC/HRDC/TUNNEL/LS- (R-4)
CONSULTANT:	S.M. CONSULTANTS An ISO 9001 Company Architecture / Masterin / Environment / Built Environ / New Delhi Web : www.smcindia.com E-Mail : support@smcindia.com
DRAWN BY:-	L.MOHANTY CHECKED BY:- SIVRAM J
RELEASED FOR	PRELIMINARY FOR APPROVAL ☑ TENDER CONSTRUCTION

S. S. LENENT PROJECT ENGINEER

PLAN

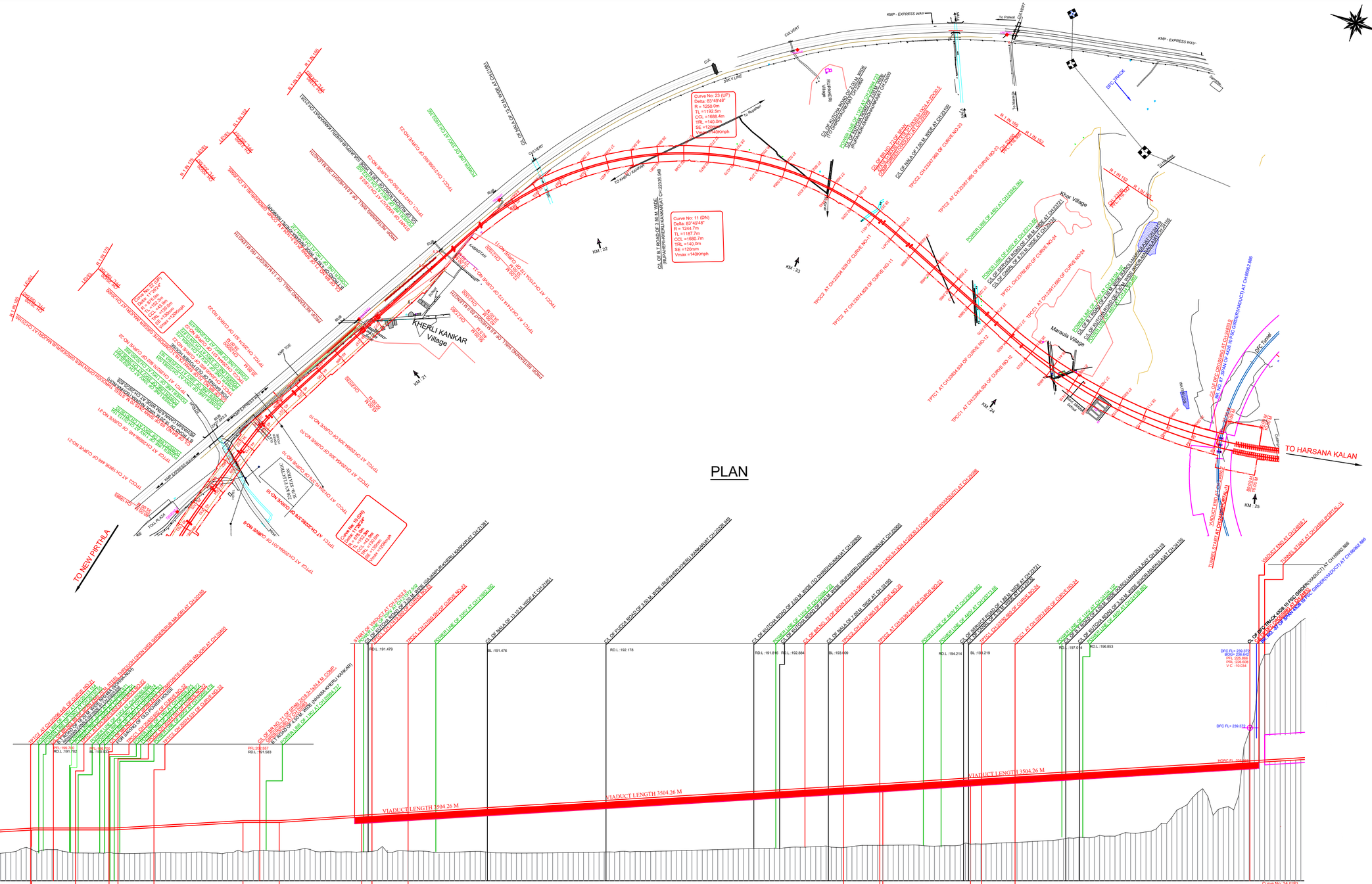
KMP - EXPRESS WAY
To Palwal
To Mathura
DFC TRACK
To Rajdhani
TO KHERLI KANKAR
KHERLI KANKAR Village
Khor Village
Maraula Village
TO HARSANA KALAN
TO NEW PIRTHLA
Curve No: 23 (UP)
Delta: 83°49'48"
R = 1250.0m
TL =1192.5m
CCL =1688.4m
TRL =140.0m
SE =120mm
Vmax =140Kmph
Curve No: 11 (DN)
Delta: 83°49'48"
R = 1244.7m
TL =1187.7m
CCL =1680.7m
TRL =140.0m
SE =120mm
Vmax =140Kmph
Curve No: 22 (UP)
Delta: 11°26'24"
R = 875.0m
TL =152.3m
CCL =43.0m
TRL =130.0m
SE =130mm
Vmax =120Kmph
Curve No: 24 (UP)
Delta = 58°13'28"
R = 1980.0m
TL =1167.7m
CCL =1881.9m
TRL =130.0m
SE =80mm
Vmax =160Kmph
VIADUCT LENGTH 3504.26 M
KM - 22
KM - 23
KM - 24
KM - 25
KM - 21
DFC FL= 239.372
BOG= 236.642
PFL 225.892
PRL 226.608
V.C. 15.034
HORC FL 239.372
DFC TUNNEL
TUNNEL START AT CH:68960.868
VIADUCT END AT CH:68962.868
VIADUCT START AT CH:68960.868
TUNNEL START AT CH:68962.868
CL OF DFC CROSSING AT CH:24553.0
CL OF DFC CROSSING AT CH:24553.0
CL OF DFC TUNNEL AT CH:68962.868
CL OF DFC TUNNEL AT CH:68960.868
CL OF DFC TUNNEL AT CH:68960.868
CL OF DFC TUNNEL AT CH:68962.868
CL OF DFC VIADUCT AT CH:68960.868
CL OF DFC VIADUCT

PLAN

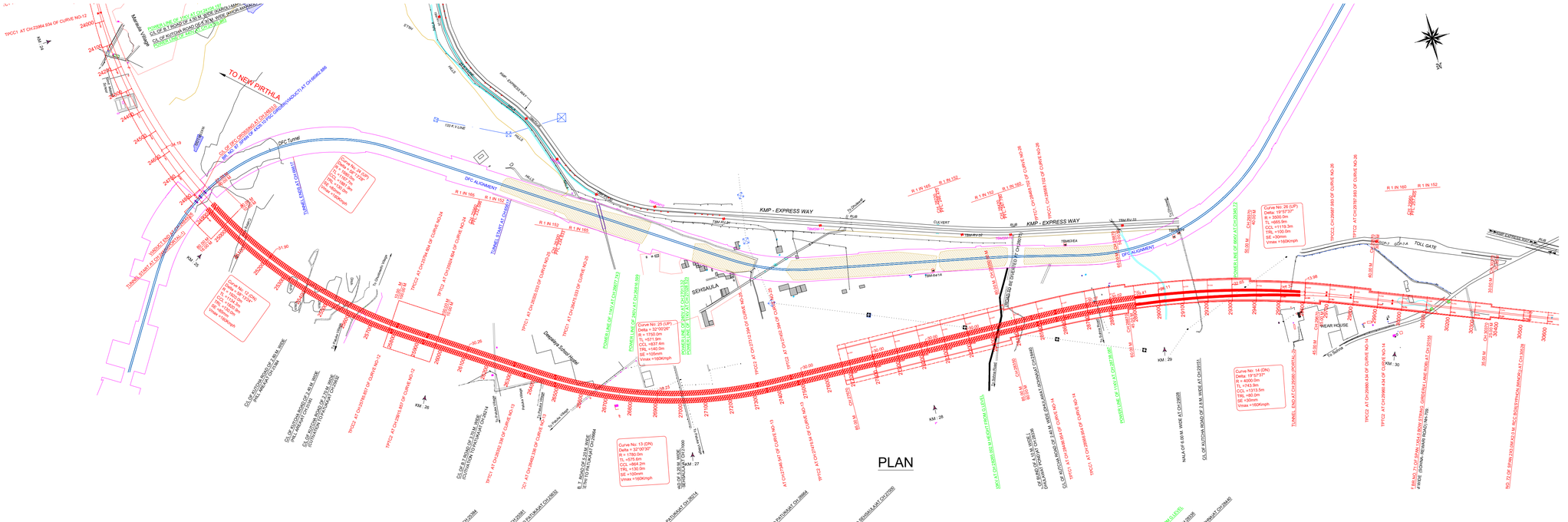

SECTION

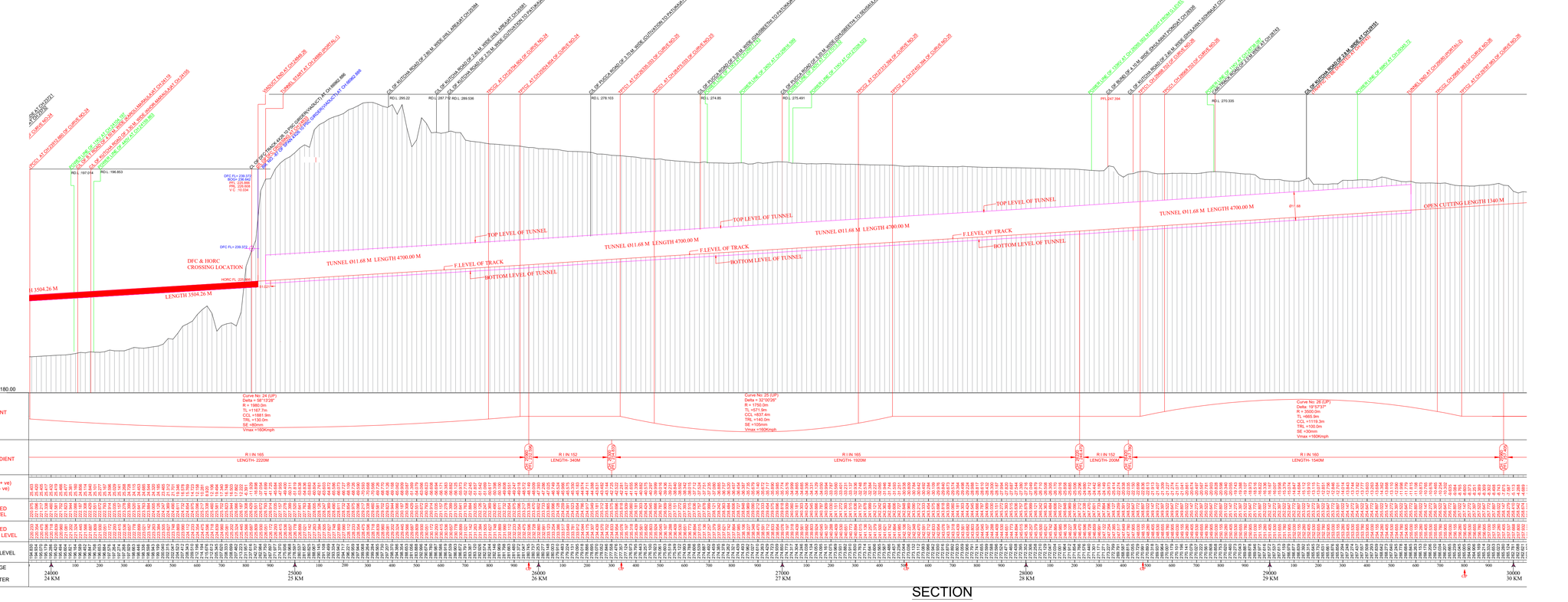

NOTES :-

1. EXISTING WORK SHOWN IN BLACK.
2. PROPOSED WORK SHOWN IN RED.
3. ALL DIMENSIONS ARE IN METER UNLESS OTHERWISE SPECIFIED.
4. CHAINAGE IS RECKONED 0.00 FROM C.L. OF NEW PRITHLA STATION BUILDING .
5. RAIL LEVEL SHOULD BE 0.742m ABOVE FORMATION LEVEL FOR TRACK STRUCTURE 60KG NEW RAIL ON PSC SLEEPER (1660/KM) WITH 350mm BALLAST CUSHION.
6. RULLING GRADIENT IS 1 IN 150 OF THIS SECTION.(COMPENSATED)
7. VERTICAL CURVE WILL BE PROVIDED AS PER IRPWM PARA 419.
8. CROSS / LONGITUDINAL DRAINAGE ARRANGEMENT BET TRACK SHOULD BE PROVIDED WHERVER REQUIRED .
9. TROLLY REFUDGE IN BANKING / CUTTING SHALL BE PROVIDED AS PER PROVISION OF IRPWM.
10. CRS. SANCTION WILL BE OBTAINED BEFORE EXECUTION OF WORK FALLING UNDER PARA 130(2) OF IRPWM.
11. STANDRAD OF LOADING (FOR PROP. LINE):- 32.5 T LOADING-2008 & HIGH RISE OHE.
12. TELEPHONE CABLE TO BE LAID FOR TELECOMMUNICATION.
13. ALL ELECTRICAL X-ING WILL BE AS PER PARA II (i) OF CHAPTER 1 GENERAL OF SCHEDULE 1 OF SOD 2004.

LIST OF TBM

TBM No.	Easting	Northing	Elevation
SM-9	699327.653	3121920.632	253.2
SM-10	699041.016	3122185.520	271.558
SM-11	698349.641	3122451.730	284.291
SM-12	697601.855	3122685.020	278.11

LEGEND

EXISTING CENTRE LINE	
PROPOSED CENTRE LINE	
DFC CENTRE LINE	
EXISTING TPTC	
PROPOSED TPTC	
TBM	
KM-STONE	
PROPOSED BOUNDARY	
EXISTING BRIDGE	
PROPOSED BRIDGE	
NALA,CANAL,DRAIN	
PERMANENT STRUCTURE	
TEMPORARY STRUCTURE	
PROPOSED GATE LODGE	
TOE LINE	
ROAD	
POWER LINE WITH POLE	
PYLON	
EMBANKMENT / BUND	
ROCKY AREA	
COMPOUND WALL	
DITCH / QUARRY	
BARBED WIRE FENCING	
GROUND LEVEL	

GCHORC		HRIDC	
NAME / DEGINATION	SIGN	NAME / DEGINATION	SIGN
CHAHATEY RAM PC		SHIV OM DWIVEDI CPM/HRIDC	
SUDHIR AGRAWAL DRO/VLA		RAJU SOLANKI DSE(C)/SLI/SOUTH	
KRISHAN CHAND SAINSI DRO/VLA			

NORTHERN RAILWAY

DELHI DIVISION

PROJECT:

HARYANA ORBITAL RAIL CORRIDOR

CONNECTING PALWAL TO SONIPAT BYPASSING DELHI AREA BY LINKING ASAOTI-PATLI-SULTANPUR-ASAUDAH BY NEW ELECTRIFIED BG DOUBLE LINE

CLIENT:

HARYANA RAIL INFRASTRUCTURE DEVELOPMENT CORPORATION LIMITED.

GENERAL CONSULTANT:

GENERAL CONSULTANT FOR HARYANA ORBITAL RAIL CORRIDOR

RITES Limited in consortium with SMEC International Pty. Ltd.

SIGN:

GC/HORC DRG. NO.:-	GC-HRDC-ALL-DRW-ALN-PEP-24-30KM_A0
DRAWING NAME	DETAILED PLAN AND LONGITUDINAL SECTION FROM CHAINAGE 24.0KM TO CHAINAGE 30.0KM (TUNNEL)
N.R.H.Q.E.(P) PLAN NO.	
DIVISION PLAN NO.	
SCALE	HORIZONTAL = 1:2000 VERTICAL = 1:200
SMC DRG. NO.:-	SMC/HRDC/TUNNELS/ 24-xx

CONSULTANT: S.M. CONSULTANTS An ISO 9001 Company. 90 Upkaar, Kalkaji, New Delhi-110019 (India) Tel: 26212222, 26212223 Fax: 26212224 E-mail: smc@vsnl.com Web: www.smcindia.com

DRAWN BY:- L.MOHANTY CHECKED BY:- SIVARAM J

A K LEMANT PROJECT INCHARGE

RELEASED FOR: PRELIMINARY FOR APPROVAL; TENDER; CONSTRUCTION

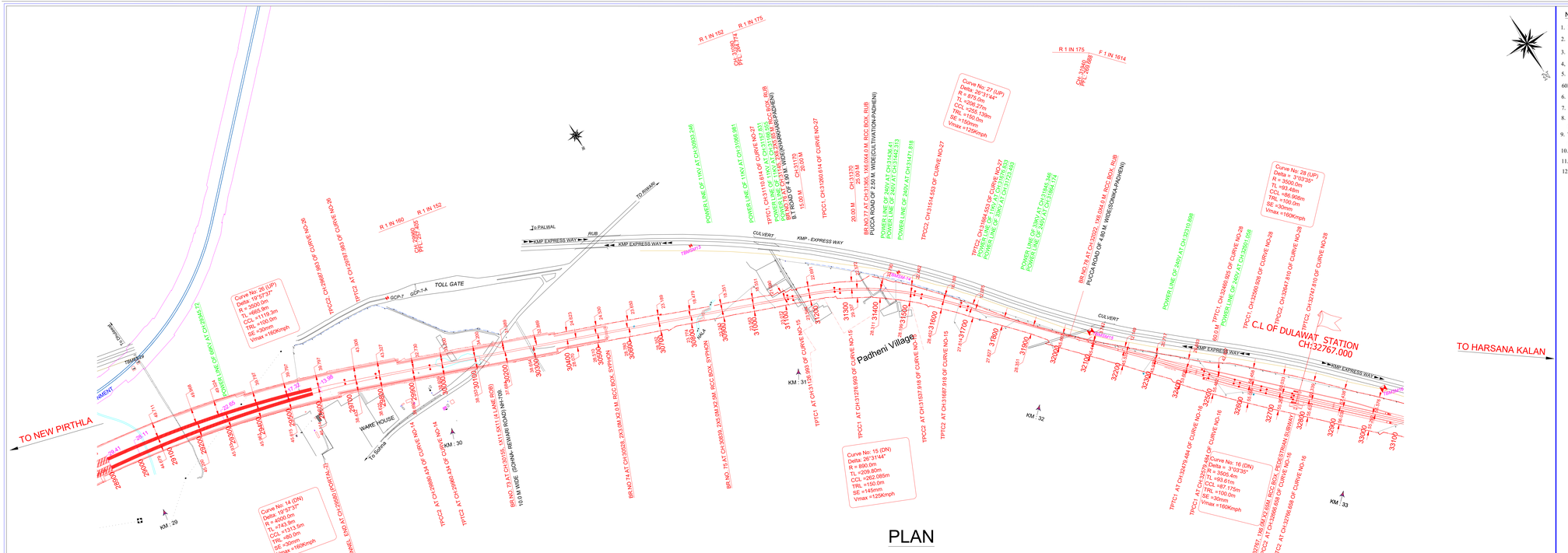
TO NEW PIRTHLA
TO HARSANA KALAN
KMP EXPRESS WAY
TOLL GATE
HARE HOUSE
Padheni Village
C.L OF DULAWAT STATION CH:32767.000
CULVERT
TUNNEL
KM : 39
KM : 30
KM : 31
KM : 32
KM : 33
Curve No: 26 (UP) Delta: 19°57'37" R = 3500.0m TL =665.9m CCL =1119.3m TRL =100.0m SE =30mm Vmax =160Kmph
Curve No: 14 (DN) Delta: 19°57'37" R = 3500.0m TL =743.5m CCL =1311.5m TRL =80.0m SE =30mm Vmax =160Kmph
Curve No: 15 (DN) Delta: 26°31'44" R = 890.0m TL =209.80m CCL =362.085m TRL =150.0m SE =145mm Vmax =125Kmph
Curve No: 27 (UP) Delta: 26°31'44" R = 875.0m TL =206.27m CCL =356.139m TRL =150.0m SE =150mm Vmax =125Kmph
Curve No: 16 (DN) Delta = 3°00'35" R = 3500.4m TL =93.61m CCL =187.175m TRL =100.0m SE =30mm Vmax =160Kmph
Curve No: 28 (UP) Delta = 3°03'35" R = 3500.0m TL =93.49m CCL =186.808m TRL =100.0m SE =30mm Vmax =160Kmph
TO RIWARI
To PALWAL
RUB
TBM
TUNNEL END AT CH:29580
TPCC2 AT CH:29580 (PORTAL-2)
TPCC2 AT CH:29760 (63 OF CURVE NO-26)
TPCC2 AT CH:29780 (63 OF CURVE NO-26)
TPCC2 AT CH:29800 (63 OF CURVE NO-26)
TPCC2 AT CH:29820 (63 OF CURVE NO-26)
TPCC2 AT CH:29840 (63 OF CURVE NO-26)
TPCC2 AT CH:29860 (63 OF CURVE NO-26)
TPCC2 AT CH:29880 (63 OF CURVE NO-26)
TPCC2 AT CH:29900 (63 OF CURVE NO-26)
TPCC2 AT CH:29920 (63 OF CURVE NO-26)
TPCC2 AT CH:29940 (63 OF CURVE NO-26)
TPCC2 AT CH:29960 (63 OF CURVE NO-26)
TPCC2 AT CH:29980 (63 OF CURVE NO-26)
TUNNEL END AT CH:29980 (PORTAL-2)
TUNNEL START AT CH:29980 (PORTAL-1)
TPCC2 AT CH:29980 (63 OF CURVE NO-26)
TPCC2 AT CH:30000 (63 OF CURVE NO-26)
TPCC2 AT CH:30020 (63 OF CURVE NO-26)
TPCC2 AT CH:30040 (63 OF CURVE NO-26)
TPCC2 AT CH:30060 (63 OF CURVE NO-26)
TPCC2 AT

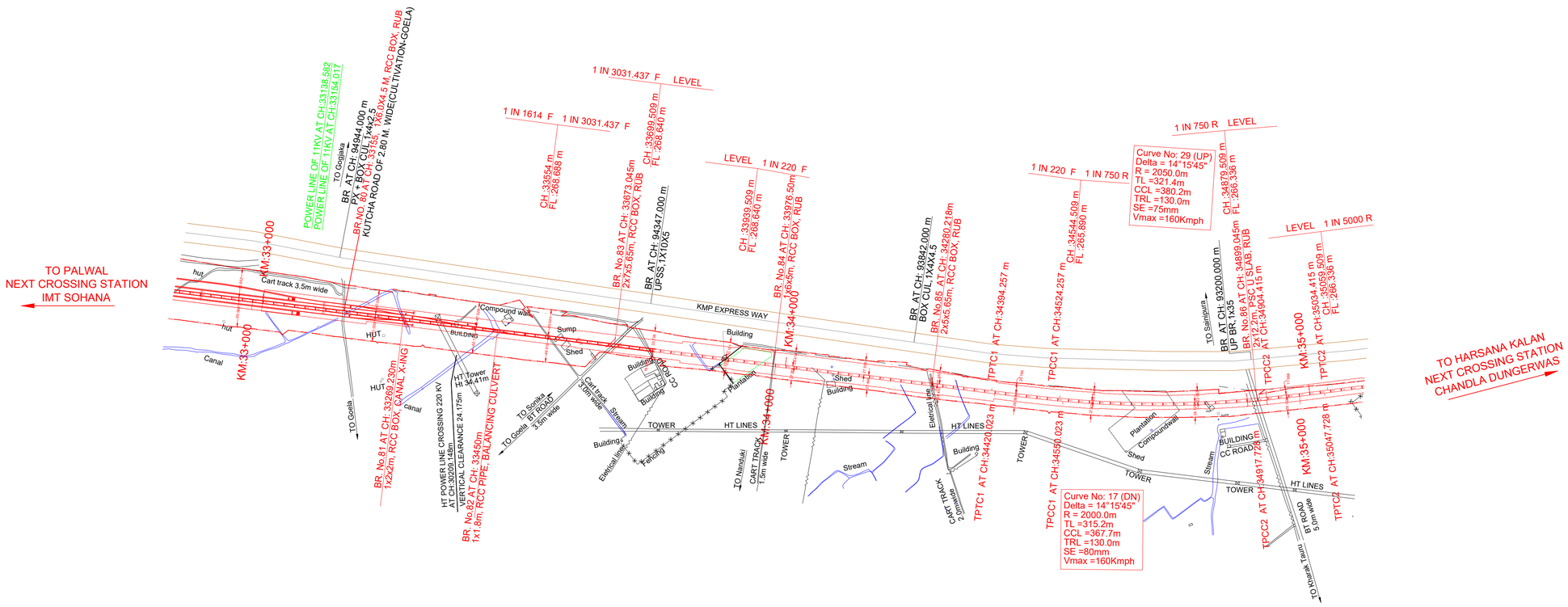

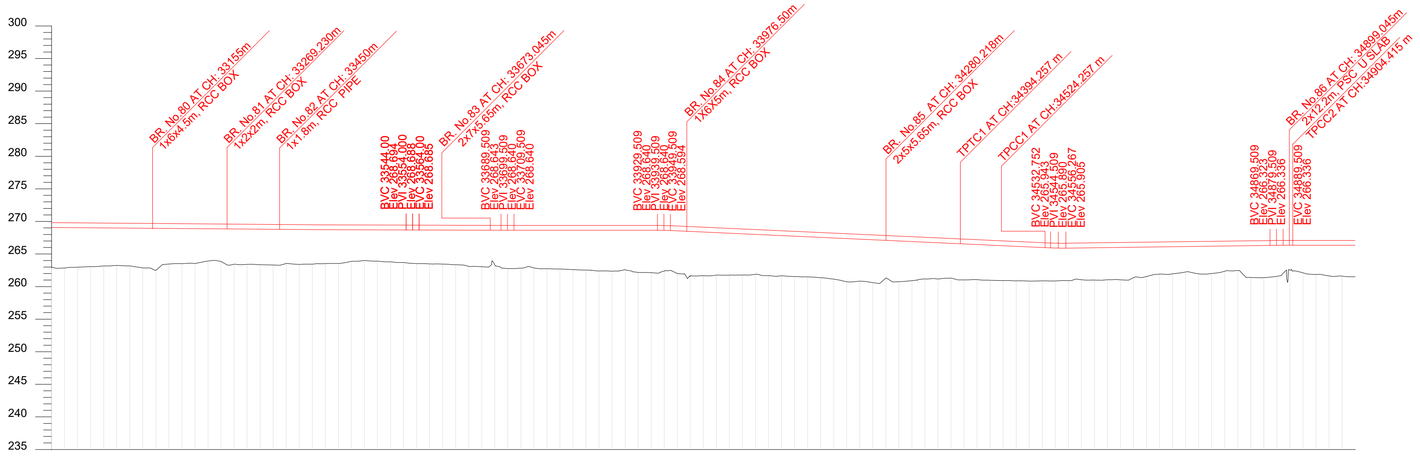

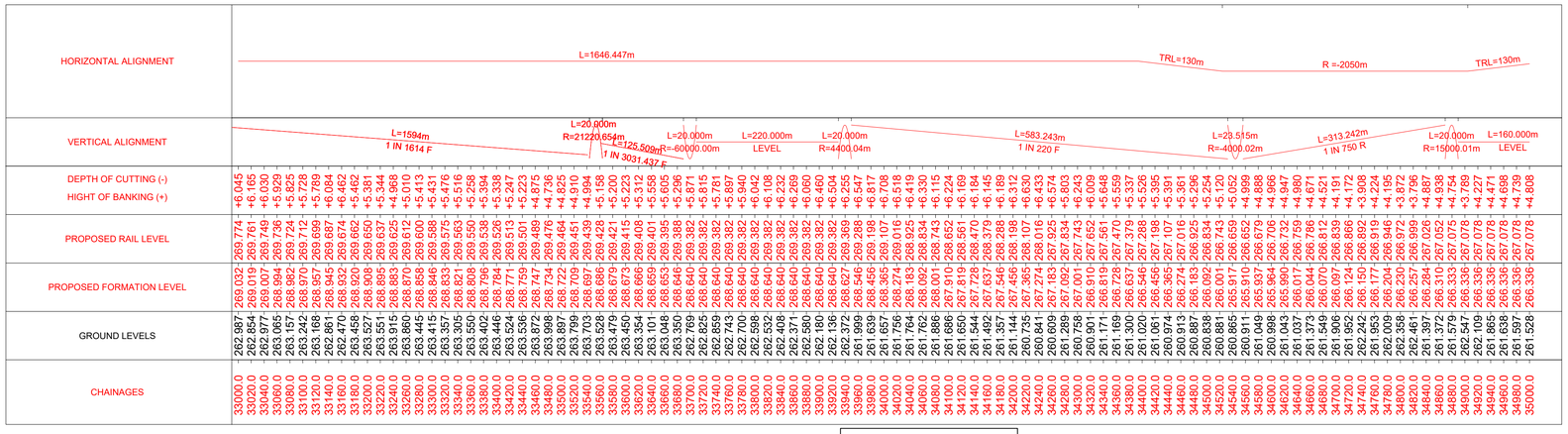

LONGITUDINAL PROFILE
HORIZONTAL-1:5000, VERTICAL-1:500

LEGEND:

- EXISTING RAILWAY TRACK
- PROPOSED UP & DN LINE
- DISMANTLING WORKS
- PROPOSED DIVERSIONS
- EXISTING ROAD
- PRO.HORC BOUNDARY
- EXPRESSWAY BOUNDARY
- HT LINE
- ELECTRICAL LINE(LT)
- STREAM / CANAL / DRAIN
- WELL
- POND
- PRO.TOE LINE

NOTE:-

1. ALL DIMENSIONS ARE IN METRE UNLESS OTHERWISE STATED
2. ALL THE LEVELS ARE WITH RESPECT TO MEAN SEA LEVEL.
3. TRACK CETRE BETWEEN MAIN LINES OF HORC HAS BEEN KEPT AS MIN 5.30m
4. PUBLIC UTILITIES HT/LT LINES OFC CABLES WATER /SEWER LINES ETC INTERFERING WITH DFC TRACKS SHALL BE RELOCATED.
5. ARRANGEMENT & SIZE OF THE BRIDGE SHOWN IN THE DRAWING IS TENTATIVE AND MAY CHANGE AS PER THE APPROVED GAD.
6. VERTICAL CLEARANCE FROM LOWEST CONDUCTOR OF HT POWER LINE TO PROPOSED RAIL LEVEL ARE SHOWN

PROPOSED TRACK STRUCTURE (TO SUIT FOR 25T AXLE LOAD)

I. FOR RAIL CORRIDOR: 160KMPH Speed
- * TRACK = 60KG RAILS
- * SLEEPER DENSITY : PSC SLEEPERS = 1660 No.S PER KM
- * BALLAST CUSHION : 350mm
- * ALL TURNOUTS ARE 1 in 12 UNLESS OTHERWISE SPECIFIED.

ABBREVIATIONS:-

1. BVC - BEGIN OF VERTICAL CURVE
2. PVI - POINT OF VERTICAL INTERSECTION
2. EVC - END OF VERTICAL CURVE

LEGEND FOR PROFILE :

- PROPOSED RAIL PROFILE
- PROPOSED FORMATION PROFILE
- GROUND PROFILE

GC/HORC	
NAME / DESIGNATION	SIGN
CHAHATEY RAM PD	
SUDHIR AGRAWAL DPD/CIVIL	
KRISHAN CHAND SAINSI CRE/CIVIL	

HRIDC	
NAME / DESIGNATION	SIGN
R. R. KUMAR GM/ IP&P	
RAJU SOLANKI DGM/CIVIL	

PROJECT:
HARYANA ORBITAL RAIL CORRIDOR
CONNECTING PALWAL TO SONIPAT BYPASSING DELHI AREA BY LINKING ASAOTI-PATLI-SULTANPUR-ASAUDAH BY NEW ELECTRIFIED BG DOUBLE LINE

CLIENT:
HARYANA RAIL INFRASTRUCTURE DEVELOPMENT CORPORATION LIMITED.

GENERAL CONSULTANT:
GENERAL CONSULTANT FOR
HARYANA ORBITAL RAIL CORRIDOR
RITES Limited in consortium with SMEC International Pty. Ltd.

TITLE : CONCEPTUAL PLAN & LONGITUDINAL SECTION (33.0 KM TO 35.0 KM)

GC DRG.NO.	GC-HRIDC-ALL-DRW-ALN-P&P-33-35KM_A1		
ISSUE Dt:	11.11.2022	REVISED Dt:	24.12.2022
CONSULTANTS :		AARVEE ASSOCIATES	

aarvee associates
architects engineers & consultants pvt.ltd.
Ravula Residency, Srinagar Colony Main Rd., Hyderabad-82, India
Tel: 91-40-23737633; Fax: 91-40-23736277
e-mail: railways@aarvee.net; web:www.aarvee.net

TANMAY (AM CAD) DRAWN	G.PRASAD (M) CHECKED	N.J. RAO (VP) APPROVED

DRG.NO.AA/2245/AL/DR/P&P/R3	SHEET No. 6 OF 24	
SCALE : H = 1:5000 V = 1:500	ISSUED Dt: 26.11.2019	REV Dt: 06-08-2022

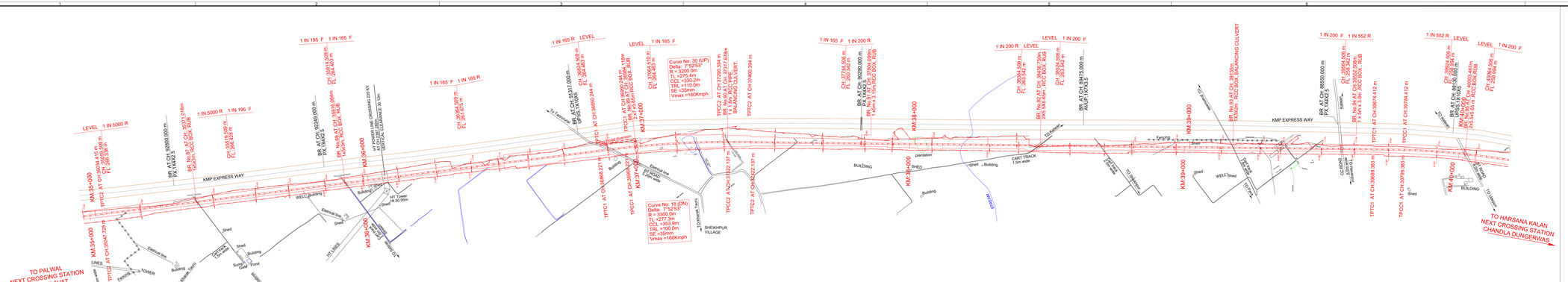

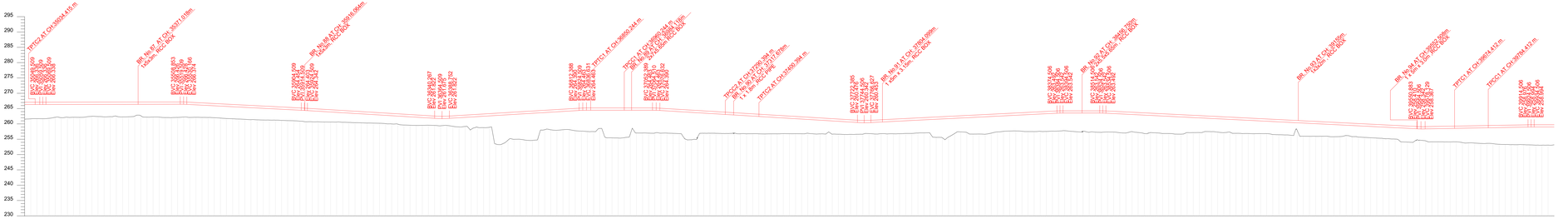

HORIZONTAL ALIGNMENT	TRL=130m; L=1815.829m; TRL=110m; R =3200m; TRL=110m; L=2274.018m; TRL=110m; R =2850m
VERTICAL ALIGNMENT	L=1600.00m R=40000.00m LEVEL; L=438.344m i IN 5000 R; L=313.91m R=40000.04m i IN 195 F; L=374.344m i IN 195 F; L=200.000m R=21451.01m i IN 165 F; L=415.708m i IN 165 F; L=448.456m R=-40000.04m i IN 165 R; L=423.637m i IN 165 R; L=434.243m R=-40000.04m i IN 165 F; L=215.758m LEVEL; L=434.343m R=40000.04m i IN 165 F; L=645.753m i IN 165 F; L=464.242m R=-40000.04m i IN 200 R; L=807.879m i IN 200 R; L=1200.000m R=-120.000m LEVEL; R=-40000.04m LEVEL; L=1016.377m i IN 200 F; L=37.244m R=-4000.03m i IN 552 R; L=336.377m i IN 552 R; L=2.000m R=-119.048m L=120.000m LEVEL
DEPTH OF CUTTING (-) HIGHT OF BANKING (+)	-4.808 -4.670 -4.531 -4.194 -4.056 -3.917 -3.779 -3.641 -3.502 -3.364 -3.225 -3.087 -2.948 -2.810 -2.671 -2.533 -2.394 -2.256 -2.117 -1.979 -1.840 -1.702 -1.563 -1.425 -1.286 -1.148 -1.009 -0.871 -0.732 -0.594 -0.455 -0.317 -0.178 -0.040 0.099 0.237 0.376 0.514 0.653 0.791 0.930 1.068 1.207 1.345 1.484 1.622 1.761 1.899 2.038 2.176 2.315 2.453 2.592 2.730 2.869 3.007 3.146 3.284 3.423 3.561 3.700 3.838 3.977 4.115 4.254 4.392 4.531 4.669 4.808 4.946 5.085 5.223 5.362 5.500 5.639 5.777 5.916 6.054 6.193 6.331 6.470 6.608 6.747 6.885 7.024 7.162 7.301 7.439 7.578 7.716 7.855 7.993 8.132 8.270 8.409 8.547 8.686 8.824 8.963 9.101 9.240 9.378 9.517 9.655 9.794 9.932 10.071 10.209 10.348 10.486 10.625 10.763 10.902 11.040 11.179 11.317 11.456 11.594 11.733 11.871 12.010 12.148 12.287 12.425 12.564 12.702 12.841 12.979 13.118 13.256 13.395 13.533 13.672 13.810 13.949 14.087 14.226 14.364 14.503 14.641 14.780 14.918 15.057 15.195 15.334 15.472 15.611 15.749 15.888 16.026 16.165 16.303 16.442 16.580 16.719 16.857 16.996 17.134 17.273 17.411 17.550 17.688 17.827 17.965 18.104 18.242 18.381 18.519 18.658 18.796 18.935 19.073 19.212 19.350 19.489 19.627 19.766 19.904 20.043 20.181 20.320 20.458 20.597 20.735 20.874 21.012 21.151 21.289 21.428 21.566 21.705 21.843 21.982 22.120 22.259 22.397 22.536 22.674 22.813 22.951 23.090 23.228 23.367 23.505 23.644 23.782 23.921 24.059 24.198 24.336 24.475 24.613 24.752 24.890 25.029 25.167 25.306 25.444 25.583 25.721 25.860 25.998 26.137 26.275 26.414 26.552 26.691 26.829 26.968 27.106 27.245 27.383 27.522 27.660 27.799 27.937 28.076 28.214 28.353 28.491 28.630 28.768 28.907 29.045 29.184 29.322 29.461 29.599 29.738 29.876 30.015 30.153 30.292 30.430 30.569 30.707 30.846 30.984 31.123 31.261 31.400 31.538 31.677 31.815 31.954 32.092 32.231 32.369 32.508 32.646 32.785 32.923 33.062 33.200 33.339 33.477 33.616 33.754 33.893 34.031 34.170 34.308 34.447 34.585 34.724 34.862 35.001 35.139 35.278 35.416 35.555 35.693 35.832 35.970 36.109 36.247 36.386 36.524 36.663 36.801 36.940 37.078 37.217 37.355 37.494 37.632 37.771 37.909 38.048 38.186 38.325 38.463 38.602 38.740 38.879 39.017 39.156 39.294 39.433 39.571 39.710 39.848 39.987 40.125 40.264 40.402 40.541 40.679 40.818
PROPOSED RAIL LEVEL	267.778 267.778 267.778

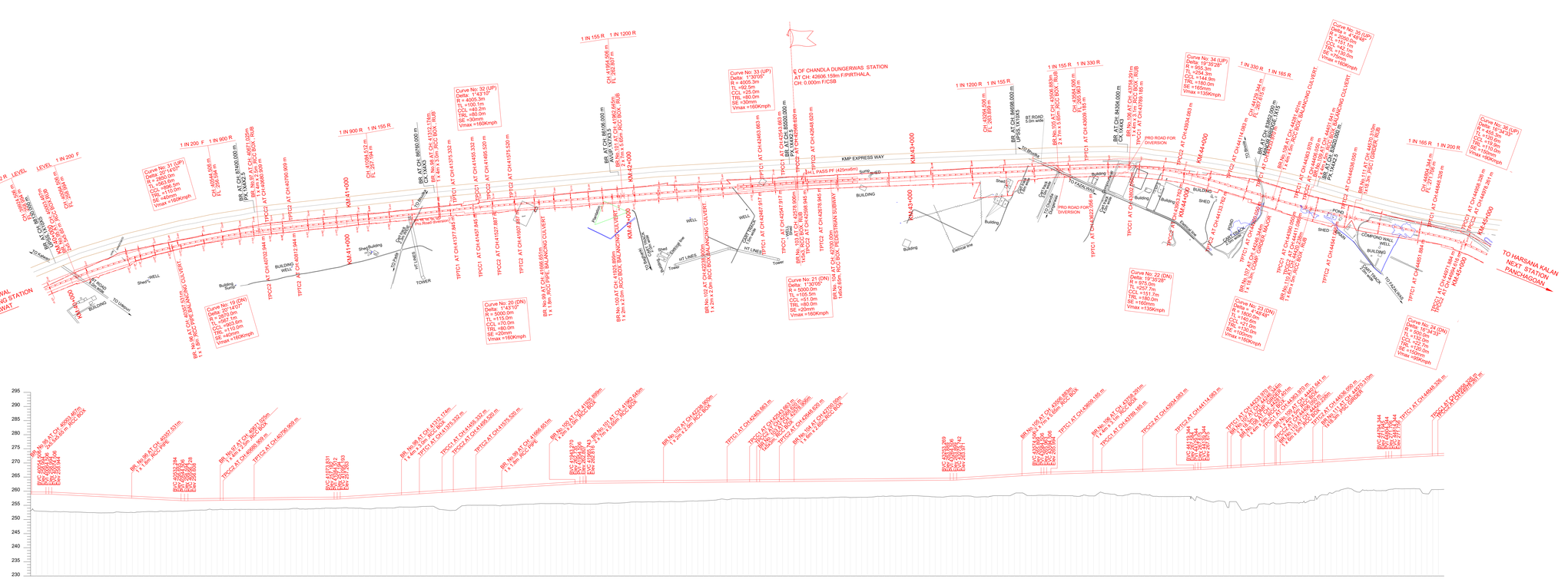
TO PALWAL NEXT CROSSING STATION DULAWAT
TO HARSANA KALAN NEXT STATION PANCHGAON
KMP EXPRESS WAY
KM 43+000
KM 42+000
KM 41+000
KM 44+000
KM 45+000
KM 40+000
CHANDLA DUNGERWAS STATION
CH: 0.000m F/CSB
1 IN 200 F
1 IN 900 R
1 IN 155 R
1 IN 1200 R
1 IN 330 R
1 IN 165 R
1 IN 553 R
LEVEL
Curve No: 31 (UP) Delta: 2°45'0" R = 2065.0m TL =99.0m CCL =110.0m SE =81.0mm Vmax =160Kmph
Curve No: 32 (UP) Delta: 1°43'10" R = 4005.3m TL = 100.1m CCL =40.2m TRL =80.0m SE =30mm Vmax =160Kmph
Curve No: 33 (UP) Delta: 1°30'00" R = 4005.3m TL =52.5m CCL =25.0m TRL =80.0m SE =30mm Vmax =160Kmph
Curve No: 34 (UP) Delta: 1°30'28" R = 955.3m TL =254.3m CCL =144.0m TRL =80.0m SE =165mm Vmax =135Kmph
Curve No: 35 (UP) Delta: 1°30'0" R = 3056.0m TL =80.0m CCL =160.0m TRL =80.0m SE =110.0mm Vmax =160Kmph
Curve No: 36 (UP) Delta: 1°30'0" R = 3056.0m TL =80.0m CCL =160.0m TRL =80.0m SE =110.0mm Vmax =160Kmph
Curve No: 18 (DN) Delta: 2°0'14'0" R = 2865.0m TL =100.0m CCL =110.0m TRL =80.0m SE =45mm Vmax =160KmPH
Curve No: 20 (DN) Delta: 1°43'10" R = 5000.0m TL =115.0m CCL =70.0m TRL =80.0m SE =20mm Vmax =160Kmph
Curve No: 21 (DN) Delta: 1°30'05" R = 5000.0m TL =105.0m CCL =70.0m TRL =80.0m SE =20mm Vmax =160Kmph
Curve No: 22 (DN) Delta: 1°30'28" R = 955.3m TL =252.0m CCL =117.0m TRL =80.0m SE =160mm Vmax =135Kmph
Curve No: 23 (DN) Delta: 1°30'0" R = 3056.0m TL =80.0m CCL =160.0m TRL =80.0m SE =110.0mm Vmax =160Kmph
Curve No: 24 (DN) Delta: 1°30'0" R = 3056.0m TL =80.0m CCL =160.0m TRL =80.0m SE =110.0mm Vmax =160Kmph
BR No: 99 AT CH: 42696.650m 1 x 6.4m RCC BOX
BR No: 100 AT CH: 42696.650m 1 x 6.4m RCC BOX
BR No: 101 AT CH: 42696.650m 2 x 7m x 5.65m RCC BOX
BR No: 102 AT CH: 42696.650m 1 x 6.4m RCC BOX
BR No: 103 AT CH: 42696.650m 1 x 6.4m RCC BOX
BR No: 104 AT CH: 42696.650m 1 x 6.4m RCC BOX
BR No: 105 AT CH: 43708.291m 2 x 7m x 5.65m RCC BOX
BR No: 106 AT CH: 43708.291m 1 x 6.4m RCC BOX
BR No: 107 AT CH: 43708.169 m 1 x 6.4m RCC BOX
BR No: 108 AT CH: 43708.169 m 1 x 6.4m RCC BOX
BR No: 109 AT CH: 43708.169 m 1 x 6.4m RCC BOX
BR No: 110 AT CH: 43708.169 m 1 x 6.4m RCC BOX
BR No: 111 AT CH: 44304.000 m 2 x 7m x 5.65m RCC BOX
BR No: 112 AT CH: 44304.000 m 1 x 6.4m RCC BOX
BR No: 113 AT CH: 44304.000 m 1 x 6.4m RCC BOX
BR No: 114 AT CH: 44304.000 m 1 x 6.4m RCC BOX
BR No:

LONGITUDINAL PROFILE

LEGEND:

EXISTING RAILWAY TRACK	
PROPOSED UP & DN LINE	
DISMANTLING WORKS	
PROPOSED DIVERSIONS	
EXISTING ROAD	
PRO.HORC BOUNDARY	
EXPRESSWAY BOUNDARY	
HT LINE	
ELECTRICAL LINE(LT)	
STREAM / CANAL / DRAIN	
WELL	
POND	
PRO.TOE LINE	

NOTE:-

1. ALL DIMENSIONS ARE IN METRE UNLESS OTHERWISE STATED
2. ALL THE LEVELS ARE WITH RESPECT TO MEAN SEA LEVEL.
3. TRACK CETRE BETWEEN MAIN LINES OF HORC HAS BEEN KEPT AS MIN 5.30m
4. PUBLIC UTILITIES HT/LT LINES OFC CABLES WATER /SEWER LINES ETC INTERFERING WITH DFC TRACKS SHALL BE RELOCATED.
5. ARRANGEMENT & SIZE OF THE BRIDGE SHOWN IN THE DRAWING IS TENTATIVE AND MAY CHANGE AS PER THE APPROVED GAD.
6. VERTICAL CLEARANCE FROM LOWEST CONDUCTOR OF HT POWER LINE TO PROPOSED RAIL LEVEL ARE SHOWN

PROPOSED TRACK STRUCTURE (TO SUIT FOR 25T AXLE LOAD)

I. FOR RAIL CORRIDOR: 160KMPH Speed

* TRACK = 60KG RAILS
* SLEEPER DENSITY : PSC SLEEPERS = 1660 No.S PER KM
* BALLAST CUSHION : 350mm
* ALL TURNOUTS ARE 1 in 12 UNLESS OTHERWISE SPECIFIED.

ABBREVIATIONS:-

1. BVC - BEGIN OF VERTICAL CURVE
2. PVI - POINT OF VERTICAL INTERSECTION
2. EVC - END OF VERTICAL CURVE

LEGEND FOR PROFILE :

PROPOSED RAIL PROFILE
PROPOSED FORMATION PROFILE
GROUND PROFILE

GC/HORC	
NAME / DESIGNATION	SIGN
CHAHATEY RAM PD	
SUDHIR AGRAWAL DPD/CIVIL	
KRISHAN CHAND SAINSI CRE/CIVIL	

HRIDC	
NAME / DESIGNATION	SIGN
R. R. KUMAR GM/ IP&P	
UMA. M. RAO DGM/CIVIL	

PROJECT:
HARYANA ORBITAL RAIL CORRIDOR
CONNECTING PALWAL TO SONIPAT BYPASSING DELHI AREA BY LINKING ASAOTI-PATLI-SULTANPUR-ASAUDAH BY NEW ELECTRIFIED BG DOUBLE LINE

CLIENT:
HARYANA RAIL INFRASTRUCTURE DEVELOPMENT CORPORATION LIMITED.

GENERAL CONSULTANT:
GENERAL CONSULTANT FOR
HARYANA ORBITAL RAIL CORRIDOR
RITES Limited in consortium with SMEC International Pty. Ltd.

THE INFRASTRUCTURE PEOPLE

TITLE : CONCEPTUAL PLAN & LONGITUDINAL SECTION (45.0 KM TO 50.0 KM)

GC DRG.NO. GC-HRIDC-ALL-DRW-ALN-P&P-45-50KM_A1

ISSUE Dt: 11.11.2022 | REVISED Dt: 24.12.2022

CONSULTANTS :
aarvee associates
architects engineers & consultants pvt.ltd.
Ravula Residency, Srinagar Colony Main Rd., Hyderabad-82, India
Tel: 91-40-23737633; Fax: 91-40-23736277
e-mail: railways@aarvee.net; web:www.aarvee.net

AARVEE ASSOCIATES

TANMAY (AM CAD) DRAWN	G.PRASAD (M) CHECKED	N.J. RAO (VP) APPROVED

DRG.NO.AA/2245/AL/DR/P&P/R3 | SHEET No. 9 OF 24
SCALE : H = 1:5000 V = 1:500 | ISSUED Dt: 26.11.2019 | REV Dt: 06-08-2022

TO PALWAL

TO HARSANA KALAN

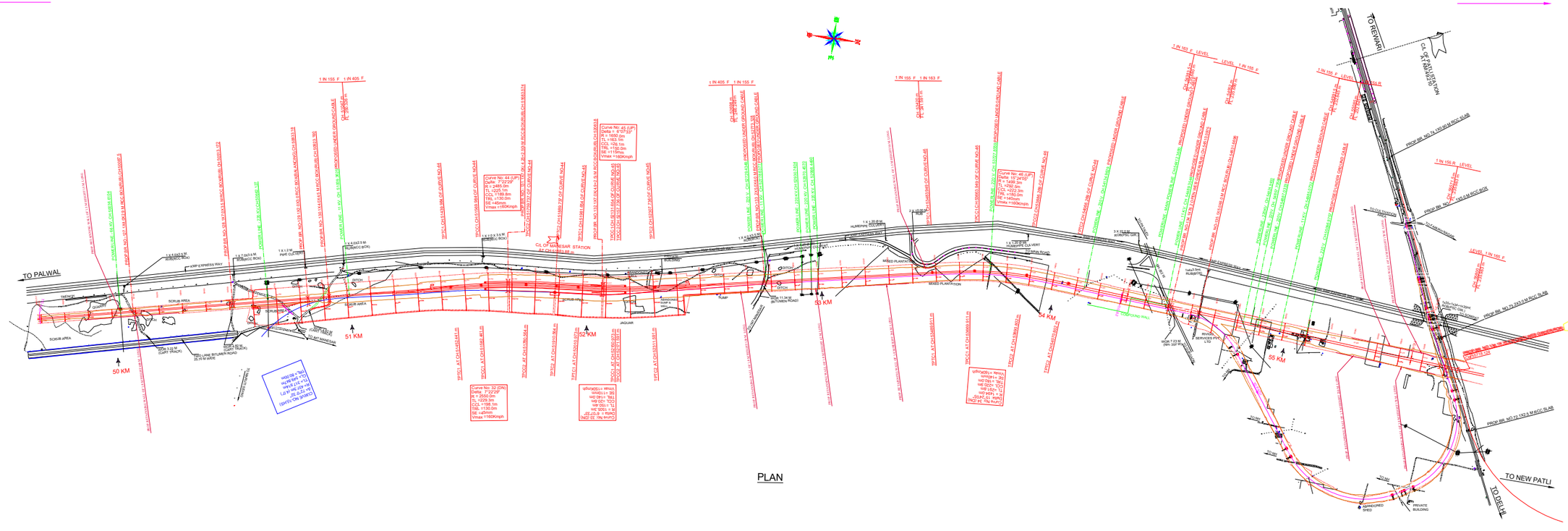
TO PALWAL
TO REWARI
TO NEW PATLI
TO DELHI
C/L OF MANESAR STATION AT CH:51883.88 m
50 KM
51 KM
52 KM
53 KM
54 KM
55 KM
Curve No: 44 (UP) Delta: 3°22'29" R = 2485.0m TL =225.1m CCL =189.8m THL =130.0m SE =45mm Vmax =160Kmph
Curve No: 45 (UP) Delta = 6°07'30" R = 1650.0m TL =153.1m CCL =302.7m THL =192.0m SE =115mm Vmax =160Kmph
Curve No: 46 (UP) Delta: 15°24'05" R = 1499.3m TL =292.9m CCL =222.3m THL =180.0m SE =140mm Vmax =160Kmph
Curve No: 48 (UP) Delta: 10°24'55" R = 1499.3m TL =202.9m CCL =272.2m THL =180.0m SE =140mm Vmax =160Kmph
Curve No: 32 (Dn) Delta: 7°22'29" R = 2650.0m TL =205.3m CCL =189.8m THL =130.0m SE =45mm Vmax =160Kmph
Curve No: 33 (Dn) Delta = 5°40'00" R = 1650.0m TL =140.0m CCL =302.7m THL =192.0m SE =115mm Vmax =160Kmph
Curve No: 34 (Dn) Delta: 15°24'05" R = 1499.3m TL =202.9m CCL =272.2m THL =180.0m SE =140mm Vmax =160Kmph
Curve No: 36 (Dn) Delta: 10°24'55" R = 1499.3m TL =292.9m CCL =222.3m THL =180.0m SE =140mm Vmax =160Kmph
1 IN 155 F
1 IN 405 F
1 IN 163 F
1 IN 155 R
1 IN 405 R
1 IN 163 R
LEVEL
1 IN 195 F
1 IN 195 R
C/L OF PALWAL STATION AT CH:0.00 m
C/L OF KARNAUTHA STATION AT CH:55574.097 m
PROP. RE. NO.1 TO 13 X 18.3 M PSC BOX SLAB
PROP. RE. NO.14 X 18.3 M PSC BOX SLAB
PROP. RE. NO.15 TO 19 X 18.3 M PSC BOX SLAB
PROP. RE. NO.20 TO 23 X 18.3 M PSC BOX SLAB
PROP. RE. NO.24 TO 27 X 18.3 M PSC BOX SLAB
PROP. RE. NO.28 TO 30 X 18.3 M PSC BOX SLAB
PROP. RE. NO.31 TO 33 X 18.3 M PSC BOX SLAB
PROP. RE. NO.34 TO 36 X 18.3 M PSC BOX SLAB
PROP. RE. NO.37 TO 39 X 18.3 M PSC BOX SLAB
PROP. RE. NO.40 TO 42 X 18.3 M PSC BOX SLAB
PROP. RE. NO.43 TO 45 X 18.3 M PSC BOX SLAB
PROP. RE. NO.46 TO 48 X 18.3 M PSC BOX SLAB
PROP. RE. NO.49 TO 51 X 18.3 M PSC BOX SLAB
PROP. RE. NO.52 TO 54 X 18.3 M PSC BOX SLAB
PROP. RE. NO.55 TO 57 X 18.3 M PSC BOX SLAB
PROP. RE. NO.58 TO 60 X 18.3 M PSC BOX SLAB
PROP. RE. NO.61 TO 63 X 18.3 M PSC BOX SLAB
PROP. RE. NO.64 TO 66 X 18.3 M PSC BOX SLAB
PROP. RE. NO.67 TO 69 X 18.3 M PSC BOX SLAB
PROP. RE. NO.70 TO 72 X 18.3 M PSC BOX SLAB
PROP. RE. NO.73 TO 75 X 18.3 M PSC BOX SLAB
PROP. RE. NO.76 TO 78 X 18.3 M PSC BOX SLAB
PROP. RE. NO.79 TO 81 X 18.3 M PSC BOX SLAB
PROP. RE. NO.82 TO 84 X 18.3 M PSC BOX SLAB
PROP. RE. NO.85 TO 87 X 18.3 M PSC BOX SLAB
PROP. RE. NO.88 TO 90 X 18.3 M PSC BOX SLAB
PROP. RE. NO.91 TO 93 X 18.3 M PSC BOX SLAB
PROP. RE. NO.94 TO 96 X 18.3 M PSC BOX SLAB
PROP. RE. NO.97 TO 99 X 18.3 M PSC BOX SLAB
PROP. RE. NO.100 TO 102 X 18.3 M PSC BOX SLAB
PROP. RE. NO.103 TO 105 X 18.3 M PSC BOX SLAB
PROP. RE. NO.106 TO 108 X 18.3 M PSC BOX SLAB
PROP. RE. NO.109 TO 110 X 18.3 M PSC BOX SLAB
PROP. RE. NO.111 TO 113 X 18.3 M PSC BOX SLAB
PROP. RE. NO.114 TO 116 X 18.3 M PSC BOX SLAB
PROP. RE. NO.117 TO 119 X 18.3 M PSC BOX SLAB
PROP. RE. NO.120 TO 122 X 18.3 M PSC BOX SLAB
PROP. RE. NO.123 TO 125 X 18.3 M PSC BOX SLAB
PROP. RE. NO.126 TO 128 X 18.3 M PSC BOX SLAB
PROP. RE. NO.129 TO 130 X 18.3 M PSC BOX SLAB
PROP. RE. NO.131 TO 133 X 18.3 M PSC BOX SLAB
PROP. RE. NO.134 TO 136 X 18.3 M PSC BOX SLAB
PROP. RE. NO.137 TO

TO PALWAL
NEXT CROSSING
STATION NEW PATLI
TO HARSANA KALAN
NEXT CROSSING
STATION BEVERKHANA
KMP EXPRESS WAY
CART TRACK
COL OF NEW PATLI STATION AT CH 58135.513m F/ PIRTHALA JUNCTION CH10.00m
SKEW 30°
SKEW 45°
SKEW 60°
SKEW 75°
SKEW 90°
1:1004 R
1:1004 F
1:239 F
1:170 R
1:265 R
1:155 R
1:155 F
1:1004 R
1:1004 F
1:170 R
1:170 F
1:265 R
1:265 F
LEVEL
1 IN 155 R
1 IN 155 F
1 IN 1004 R
1 IN 1004 F
1 IN 170 R
1 IN 170 F
1 IN 265 R
1 IN 265 F
KM 54+000
KM 55+000
KM 56+000
KM 57+000
KM 58+000
KM 59+000
KM 60+000
KM 61+000
KM 62+000
KM 63+000
KM 64+000
KM 65+000
KM 66+000
KM 67+000
KM 68+000
KM 69+000
KM 70+000
KM 71+000
KM 72+000
KM 73+000
KM

LEGEND:

- EXISTING RAILWAY TRACK
- PROPOSED UP & DN LINE
- DISMANTLING WORKS
- PROPOSED DIVERSIONS
- EXISTING ROAD
- PRO.HORC BOUNDARY
- EXPRESSWAY BOUNDARY
- HT LINE
- ELECTRICAL LINE(LT)
- STREAM / CANAL / DRAIN
- WELL
- POND
- PRO.TOE LINE

NOTE:-

1. ALL DIMENSIONS ARE IN METRE UNLESS OTHERWISE STATED
2. ALL THE LEVELS ARE WITH RESPECT TO MEAN SEA LEVEL.
3. TRACK CETRE BETWEEN MAIN LINES OF HORC HAS BEEN KEPT AS MIN 5.30m
4. PUBLIC UTILITIES HT/LT LINES OFC CABLES WATER /SEWER LINES ETC INTERFERING WITH DFC TRACKS SHALL BE RELOCATED.
5. ARRANGEMENT & SIZE OF THE BRIDGE SHOWN IN THE DRAWING IS TENTATIVE AND MAY CHANGE AS PER THE APPROVED GAD.
6. VERTICAL CLEARANCE FROM LOWEST CONDUCTOR OF HT POWER LINE TO PROPOSED RAIL LEVEL ARE SHOWN

PROPOSED TRACK STRUCTURE (TO SUIT FOR 25T AXLE LOAD)

I. FOR RAIL CORRIDOR: 160KMPH Speed
* TRACK = 60KG RAILS
* SLEEPER DENSITY : PSC SLEEPERS = 1660 No.S PER KM
* BALLAST CUSHION : 350mm
* ALL TURNOUTS ARE 1 in 12 UNLESS OTHERWISE SPECIFIED.

ABBREVIATIONS:-

1. BVC - BEGIN OF VERTICAL CURVE
2. PVI - POINT OF VERTICAL INTERSECTION
3. EVC - END OF VERTICAL CURVE

LEGEND FOR PROFILE:

- PROPOSED RAIL PROFILE
- PROPOSED FORMATION PROFILE
- GROUND PROFILE

GC/HORC		HRIDC	
NAME / DESIGNATION	SIGN	NAME / DESIGNATION	SIGN
CHHAITEY RAM PD		SHIV OM DWIVEDI CPM/HRIDC	
SUDHIR AGRAWAL DPO/CIVIL		UMA RAO DGM/C/WEST	
KRISHAN CHAND SAINSI CRE/CIVIL			

PROJECT:
HARYANA ORBITAL RAIL CORRIDOR
CONNECTING PALWAL TO SONIPAT BYPASSING DELHI AREA BY LINKING ASAOTLI-PATLI-SULTANPUR-ASAUDAH BY NEW ELECTRIFIED BG DOUBLE LINE

CLIENT:
HARYANA RAIL INFRASTRUCTURE DEVELOPMENT CORPORATION LIMITED.

GENERAL CONSULTANT:
GENERAL CONSULTANT FOR HARYANA ORBITAL RAIL CORRIDOR
RITES Limited in consortium with SMEC International Pty. Ltd.

GC DRG.NO.

TITLE :
PLAN & LONGITUDINAL SECTION
(60.0km TO 65.0km)

CONSULTANTS :
aarvee associates
architects engineers & consultants pvt.ltd.
Ravula Residency, Srinagar Colony Main Rd., Hyderabad-73, India
Tel: 91-40-23737533, Fax: 91-40-23735777,
e-mail: railways@aarvee.net, www.aarvee.net

AARVEE ASSOCIATES

DRAWN	CHECKED	APPROVED
TANMAY (AM CAD) G PRASAD (M)		N.J. RAO (VP)

DRG.NO. AA/2245/ALD/DR/P&P/R3 | SHEET No. 11 OF 24
SCALE : H = 1:500 V = 1:500 | ISSUED Dt: 26.11.2019 | REV Dt: 06-08-2022

LONGITUDINAL PROFILE
HORIZONTAL 1:5000, VERTICAL 1:500

HORIZONTAL ALIGNMENT	L=1438.572m; TRL=130m R =2700m TRL=130m; L=196.755m; TRL=105m R =705m TRL=105m; L=132.041m; TRL=90m; R =2005m TRL=90m L=53.569m; TRL=100m; R =2500m; TRL=100m; L=441.649m; TRL=110m; R =3015m; TRL=110m; L=654.812m; TRL=130m; R =2005m; TRL=130m
VERTICAL ALIGNMENT	L=519.194m; I IN 155 R; L=25.806m; L=154.193m; L=25.806m; L=127.097m; I IN 155 F; R=4000.07m; LEVEL; R=4000.07m; L=20.000m; R=-5158.93m; L=280.329m; I IN 165 F; R=-4000.03m; L=39.338m; I IN 265 R; L=410.305m; R=4000.03m; L=20.000m; R=5299.72m; L=187.500m; TRL=90m; R =2005m; TRL=90m L=25.000m; R=4000.07m; L=477.506m; I IN 160 F; R=4000.03m; L=20.000m; R=4795.22m; L=360.000m; I IN 150 F; R=4700.00m; L=20.000m; R=4700.00m; L=739.997m; I IN 401 F; R=-4000.04m; L=20.000m; R=6532.24m; L=276.148m; I IN 180 F; R=-4000.04m; L=47.700m; R=-4000.04m; L=245.077m; I IN 157 R; R=4000.09m; L=22.144m; R=4000.09m; L=1418.928m; I IN 1200 R
DEPTH OF CUTTING (-) HIGHT OF BANKING (+)	
PROPOSED RAIL LEVEL	
PROPOSED FORMATION LEVEL	
GROUND LEVELS	
CHAINAGES	

LEGEND:

- EXISTING RAILWAY TRACK
- PROPOSED UP & DN LINE
- DISMANTLING WORKS
- PROPOSED DIVERSIONS
- EXISTING ROAD
- PRO.HORC BOUNDARY
- EXPRESSWAY BOUNDARY
- HT LINE
- ELECTRICAL LINE(LT)
- STREAM / CANAL / DRAIN
- WELL
- POND
- PRO.TOE LINE

NOTE:-

1. ALL DIMENSIONS ARE IN METRE UNLESS OTHERWISE STATED
2. ALL THE LEVELS ARE WITH RESPECT TO MEAN SEA LEVEL.
3. TRACK CETRE BETWEEN MAIN LINES OF HORC HAS BEEN KEPT AS MIN 5.30m
4. PUBLIC UTILITIES HT/LT LINES OFC CABLES WATER /SEWER LINES ETC INTERFERING WITH DFC TRACKS SHALL BE RELOCATED.
5. ARRANGEMENT & SIZE OF THE BRIDGE SHOWN IN THE DRAWING IS TENTATIVE AND MAY CHANGE AS PER THE APPROVED GAD.
6. VERTICAL CLEARANCE FROM LOWEST CONDUCTOR OF HT POWER LINE TO PROPOSED RAIL LEVEL ARE SHOWN

PROPOSED TRACK STRUCTURE (TO SUIT FOR 25T AXLE LOAD)

I. FOR RAIL CORRIDOR: 160KMPH Speed
- * TRACK = 60KG RAILS
- * SLEEPER DENSITY : PSC SLEEPERS = 1660 No.S PER KM
- * BALLAST CUSHION : 350mm
- * ALL TURNOUTS ARE 1 in 12 UNLESS OTHERWISE SPECIFIED.

ABBREVIATIONS:-

1. BVC - BEGIN OF VERTICAL CURVE
2. PVI - POINT OF VERTICAL INTERSECTION
2. EVC - END OF VERTICAL CURVE

LEGEND FOR PROFILE :

- PROPOSED RAIL PROFILE
- PROPOSED FORMATION PROFILE
- GROUND PROFILE

GC/HORC		HRIDC	
NAME / DESIGNATION	SIGN	NAME / DESIGNATION	SIGN
CHAHATEY RAM PD		SHIV OM DWIVEDI CPM/HRIDC	
SUDHIR AGRAWAL DPD/CIVIL		ABHISHEK DAS DGM/C/NORTH	
KRISHAN CHAND SAINSI CRE/CIVIL			

PROJECT:
HARYANA ORBITAL RAIL CORRIDOR
CONNECTING PALWAL TO SONIPAT BYPASSING DELHI AREA BY LINKING ASAOTI-PATLI-SULTANPUR-ASAUDAH BY NEW ELECTRIFIED BG DOUBLE LINE

CLIENT:
HARYANA RAIL INFRASTRUCTURE DEVELOPMENT CORPORATION LIMITED.

GENERAL CONSULTANT:
GENERAL CONSULTANT FOR
HARYANA ORBITAL RAIL CORRIDOR
RITES Limited in consortium with SMEC International Pty. Ltd.

GC DRG.NO.

TITLE :
PLAN & LONGITUDINAL SECTION
(65.0km TO 70.0km)

CONSULTANTS : aarvee associates
architects engineers & consultants pvt.ltd.
Ravula Residency, Srinagar Colony Main Rd., Hyderabad-82, India
Tel: 91-40-23737633; Fax: 91-40-23736277
e-mail: railways@aarvee.net; web:www.aarvee.net

AARVEE ASSOCIATES

TANMAY (AM CAD) DRAWN	G.PRASAD (M) CHECKED	N.J. RAO (VP) APPROVED

DRG.NO. AA/2245/AL/DR/P&P/R3 | SHEET No. 12 OF 24
SCALE : H = 1:5000 V = 1:500 | ISSUED Dt: 26.11.2019 | REV Dt: 06-08-2022

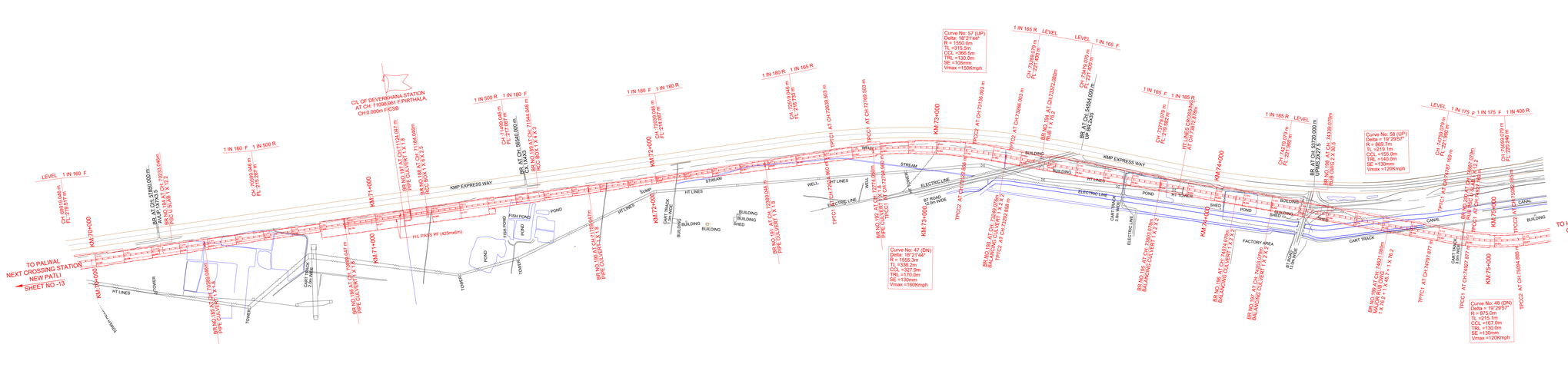

LONGITUDINAL PROFILE
HORIZONTAL 1:500 VERTICAL 1:100

LEGEND:
- EXISTING RAILWAY TRACK
- PROPOSED UP & DN LINE
- DISMANTLING WORKS
- PROPOSED DIVERSIONS
- EXISTING ROAD
- PRO.HORC BOUNDARY
- EXPRESSWAY BOUNDARY
- HT LINE
- ELECTRICAL LINE(LT)
- STREAM / CANAL / DRAIN
- WELL
- POND
- PRO.TOE LINE

NOTE:-
1. ALL DIMENSIONS ARE IN METRE UNLESS OTHERWISE STATED
2. ALL THE LEVELS ARE WITH RESPECT TO MEAN SEA LEVEL
3. TRACK CETRE BETWEEN MAIN LINES OF HORC HAS BEEN KEPT AS MIN 5.30m
4. PUBLIC UTILITIES HT/LT LINES OFC CABLES WATER /SEWER LINES ETC INTERFERING WITH DFC TRACKS SHALL BE RELOCATED.
5. ARRANGEMENT & SIZE OF THE BRIDGE SHOWN IN THE DRAWING IS TENTATIVE AND MAY CHANGE AS PER THE APPROVED GAD.
6. VERTICAL CLEARANCE FROM LOWEST CONDUCTOR OF HT POWER LINE TO PROPOSED RAIL LEVEL ARE SHOWN

PROPOSED TRACK STRUCTURE (TO SUIT FOR 25T AXLE LOAD)

I. FOR RAIL CORRIDOR: 160KMPH Speed
* TRACK = 60KG RAILS
* SLEEPER DENSITY : PSC SLEEPERS = 1660 No.S PER KM
* BALLAST CUSHION : 350mm
* ALL TURNOUTS ARE 1 in 12 UNLESS OTHERWISE SPECIFIED.

ABBREVIATIONS:-
1. BVC - BEGIN OF VERTICAL CURVE
2. PVI - POINT OF VERTICAL INTERSECTION
2. EVC - END OF VERTICAL CURVE

LEGEND FOR PROFILE :
- PROPOSED RAIL PROFILE
- PROPOSED FORMATION PROFILE
- GROUND PROFILE

GC/HORC		HRIDC	
NAME / DESIGNATION	SIGN	NAME / DESIGNATION	SIGN
CHAHATEY RAM PD		SHIV OM DWIVEDI CPM/HRIDC	
SUDHIR AGRAWAL DPO/CIVIL		ABHISHEK DAS DOM/CNORTH	
KRISHAN CHAND SAINSI CRE/CIVIL			

PROJECT:
HARYANA ORBITAL RAIL CORRIDOR
CONNECTING PALWAL TO SONIPAT BYPASSING DELHI AREA BY LINKING ASAOTI-PATLI-SULTANPUR-ASAUDAH BY NEW ELECTRIFIED BG DOUBLE LINE

CLIENT:
HARYANA RAIL INFRASTRUCTURE DEVELOPMENT CORPORATION LIMITED.

GENERAL CONSULTANT:
GENERAL CONSULTANT FOR HARYANA ORBITAL RAIL CORRIDOR
RITES Limited in consortium with SMEC International Pty. Ltd.

GC DRG.NO:

TITLE :
PLAN & LONGITUDINAL SECTION
(70.0Km TO 75.0Km)

CONSULTANTS :
aarvee associates
architects engineers & consultants pvt ltd.
Revival Tower, Nallagandla Gachibowli, Hyderabad-500 032. India
Tel: 91-40-23076512 Fax: 91-40-23076507
e-mail: hyderabad@aarvee.net; web:www.aarvee.net

AARVEE ASSOCIATES

DRAWN	CHECKED	APPROVED
TANMAY (AM CAD)	G.PRASAD (M)	N.J. RAO (VP)

DRG.NO: AA/2245/ALIGN/DR/P&P/R3 | SHEET No. 13 OF 24
SCALE : H = 1:5000 V = 1:500 | ISSUED Dt: 26.11.2019 | REV Dt: 06-08-2022

HORIZONTAL ALIGNMENT	R =870m TRL=140m L=2809.527m TRL=130m R =2005m TRL=130m L=217.738m TRL=130m R =1825m TRL=130m L=1411.671m
VERTICAL ALIGNMENT	L=493.571m 1 IN 400 R; R=24000.31m; L=20.000m; L=360.000m 1 IN 300 R; L=1799.000m 1 IN 1200 F; L=20.000m R=4235.36m; L=648.481m 1 IN 180 F; L=65.078m R=4000.03m; L=633.911m 1 IN 175 R; L=97.289m R=4000.03m; L=524.329m 1 IN 165 F; L=28.242m R=4808.06m; L=344.766m LEVEL
DEPTH OF CUTTING (-) HIGHT OF BANKING (+)	
PROPOSED RAIL LEVEL	
PROPOSED FORMATION LEVEL	
GROUND LEVELS	
CHAINAGES	

LONGITUDINAL PROFILE.
HORIZONTAL 1:500 VERTICAL 1:100

LEGEND:
- EXISTING RAILWAY TRACK
- PROPOSED UP & DN LINE
- DISMANTLING WORKS
- PROPOSED DIVERSIONS
- EXISTING ROAD
- PRO.HORC BOUNDARY
- EXPRESSWAY BOUNDARY
- HT LINE
- ELECTRICAL LINE(LT)
- STREAM / CANAL / DRAIN
- WELL
- POND
- PRO.TOE LINE

NOTE:-
1. ALL DIMENSIONS ARE IN METRE UNLESS OTHERWISE STATED
2. ALL THE LEVELS ARE WITH RESPECT TO MEAN SEA LEVEL
3. TRACK CETRE BETWEEN MAIN LINES OF HORC HAS BEEN KEPT AS MIN 5.30m
4. PUBLIC UTILITIES HT/LT LINES OFC CABLES WATER /SEWER LINES ETC INTERFERING WITH DFC TRACKS SHALL BE RELOCATED.
5. ARRANGEMENT & SIZE OF THE BRIDGE SHOWN IN THE DRAWING IS TENTATIVE AND MAY CHANGE AS PER THE APPROVED GAD.
6. VERTICAL CLEARANCE FROM LOWEST CONDUCTOR OF HT POWER LINE TO PROPOSED RAIL LEVEL ARE SHOWN

PROPOSED TRACK STRUCTURE (TO SUIT FOR 25T AXLE LOAD)

I. FOR RAIL CORRIDOR: 160KMPH Speed
- * TRACK = 60KG RAILS
- * SLEEPER DENSITY : PSC SLEEPERS = 1660 No.S PER KM
- * BALLAST CUSHION : 350mm
- * ALL TURNOUTS ARE : 1 in 12 UNLESS OTHERWISE SPECIFIED.

ABBREVIATIONS:-
1. BVC - BEGIN OF VERTICAL CURVE
2. PVI - POINT OF VERTICAL INTERSECTION
3. EVC - END OF VERTICAL CURVE

LEGEND FOR PROFILE :
- PROPOSED RAIL PROFILE
- PROPOSED FORMATION PROFILE
- GROUND PROFILE

GC/HORC		HRIDC	
NAME / DESIGNATION	SIGN	NAME / DESIGNATION	SIGN
CHAHATEY RAM PD		SHIV OM DWIVEDI CPM/HRIDC	
SUDHIR AGRAWAL DPD/CIVIL		ABHISHEK DAS DGM/C/NORTH	
KRISHAN CHAND SAINSI CRE/CIVIL			

PROJECT:
HARYANA ORBITAL RAIL CORRIDOR
CONNECTING PALWAL TO SONIPAT BYPASSING DELHI AREA BY LINKING ASAOTI-PATLI-SULTANPUR-ASAUDAH BY NEW ELECTRIFIED BG DOUBLE LINE

CLIENT:
HARYANA RAIL INFRASTRUCTURE DEVELOPMENT CORPORATION LIMITED.

GENERAL CONSULTANT:
GENERAL CONSULTANT FOR HARYANA ORBITAL RAIL CORRIDOR
RITES Limited in consortium with SMEC International Pty. Ltd.

GC DRG.NO.:

TITLE :
PLAN & LONGITUDINAL SECTION
(75.0km TO 80.0km)

CONSULTANTS :
aarvee associates
architects engineers & consultants pvt ltd.
Revolving Mansion, Ashram Road, Ahmedabad-380014, India
Tel: 91-79-27557531 Fax: 91-79-27557577
e-mail: ratheya@aarvee.net; shah@aarvee.net

AARVEE ASSOCIATES

DRAWN	CHECKED	APPROVED
TANMAY (AM CAD)	G.PRASAD (IM)	N.J. RAO (VP)

DRG.NO. AA/2245/AL/DR/P&P/R3 | SHEET No. 14 OF 24
SCALE : H = 1:5000 V = 1:500 | ISSUED Dt: 26.11.2019 | REV Dt: 06-08-2022

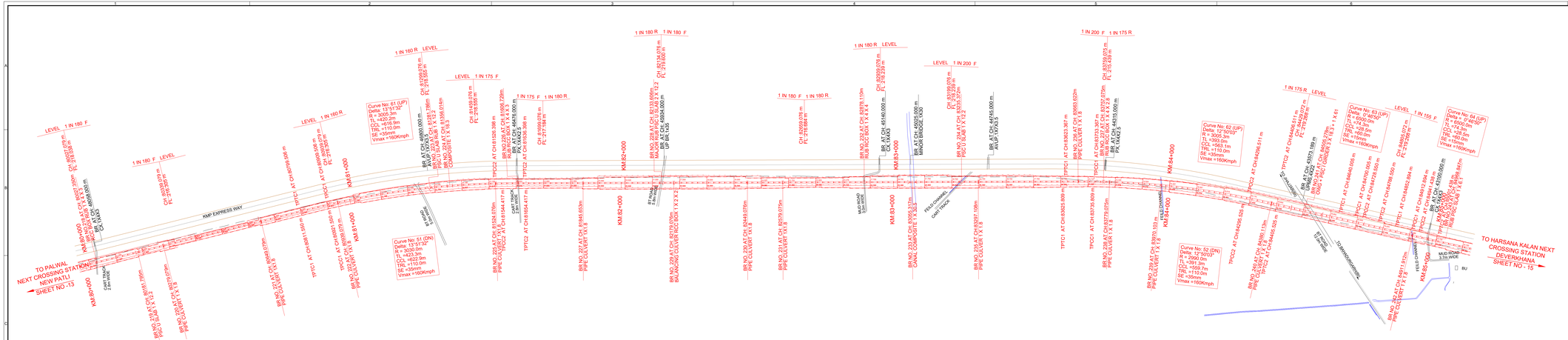
TO PALWAL NEXT CROSSING STATION NEW PATLI SHEET NO.-13
TO HARSANA KALAN NEXT CROSSING STATION DEVERKHANA SHEET NO. - 15
KMP EXPRESS WAY
CART TRACK
Curve No: 61 (UP) Delta: 13°51'32" R = 400.3m TL =400.2m CCL =616.9m TRL =110.0m SE =35mm Vmax =160Kmph
Curve No: 51 (DN) Delta: 10°01'32" R = 400.3m TL =402.9m CCL =622.9m TRL =110.0m SE =45mm Vmax =160Kmph
Curve No: 62 (UP) Delta: 12°10'0" R = 300.2m TL =393.0m CCL =563.1m TRL =110.0m SE =35mm Vmax =160Kmph
Curve No: 52 (DN) Delta: 12°50'0" R = 299.0m TL =391.3m CCL =559.7m TRL =110.0m SE =35mm Vmax =160Kmph
Curve No: 63 (UP) Delta: 16°50'0" R = 600.1m TL =886.3m CCL =1055.5m TRL =110.0m SE =45mm Vmax =160Kmph
Curve No: 64 (UP) Delta: 9°20'0" R = 600.0m TL =784.3m CCL =1091.0m TRL =110.0m SE =45mm Vmax =160Kmph
KM 81+000
KM 82+000
KM 83+000
KM 84+000
MUD WORK 3.7m WIDE
MUD ROAD 3.7m WIDE
FIELD CHANNEL
CANAL CROSSING TYPE-I (2.5x2.5)
BR NO.228 AT CH 83279.075m PIPE CULVERT 1X1.8
BR NO.229 AT CH 83979.103 m PIPE CULVERT 1X1.8
BR NO.230 AT CH 84456.525 m PIPE CULVERT 1X1.8
BR NO.231 AT CH 84956.138m PIPE CULVERT 1X1.8
BR NO.232 AT CH 85456.552m PIPE CULVERT 1X1.8
BR NO.233 AT CH 85956.966m PIPE CULVERT 1X1.8
BR NO.234 AT CH 86457.380m PIPE CULVERT 1X1.8
BR NO.235 AT CH 86957.794m PIPE CULVERT 1X1.8
BR NO.236 AT CH 87458.208m PIPE CULVERT 1X1.8
BR NO.237 AT CH 87958.622m PIPE CULVERT 1X1.8
BR NO.238 AT CH 88459.036m PIPE CULVERT 1X1.8
BR NO.239 AT CH 88959.450m PIPE CULVERT 1X1.8
BR NO.240 AT CH 89459.864m PIPE CULVERT 1X1.8
BR NO.241 AT CH 89960.278m PIPE CULVERT 1X1.8
BR NO.242 AT CH 90460.692m PIPE CULVERT 1X1.8
BR NO.243 AT CH 90961.106m PIPE CULVERT 1X1.8
BR NO.244 AT CH 91461.520m PIPE CULVERT 1X1.8
BR NO.245 AT CH 91961.934m PIPE CULVERT 1X1.8
BR NO.246 AT CH 92462.348m PIPE CULVERT 1X1.8
BR NO.247 AT CH 92962.762m PIPE CULVERT 1X1.8
BR NO.248 AT CH 93463.176m PIPE CULVERT 1X1.8
BR NO.249 AT CH 93963.590m PIPE CULVERT 1X1.8
BR NO.250 AT CH 94464.004m PIPE CULVERT 1X1.8
BR NO.251 AT CH 94964.418m PIPE CULVERT 1X1.8
BR NO.252 AT CH 95464.832m PIPE CULVERT 1X1.8
BR NO.253 AT CH 95965.246m PIPE CULVERT 1X1.8
BR NO.254 AT CH 96465.660m PIPE CULVERT 1X1.8
BR NO.255 AT CH 96966.074m PIPE CULVERT 1X1.8
BR NO.256 AT CH 97466.488m PIPE CULVERT 1X1.8
BR NO.257 AT CH 97966.902m PIPE CULVERT 1X1.8
BR NO.258 AT CH 98467.316m PIPE CULVERT 1X1.8
BR NO.259 AT CH 98967.730m PIPE CULVERT 1X1.8
BR NO.260 AT CH 99468.144m PIPE CULVERT 1X1.8
BR NO.261 AT CH 99968.558m PIPE CULVERT 1X1.8
BR NO.262 AT CH 100468.972m PIPE CULVERT 1X1.8
BR NO.263 AT CH 100969.386m PIPE CULVERT 1X1.8
BR NO.264 AT CH 101469.800m PIPE CULVERT 1X1.8
BR NO.265 AT CH 101970.214m PIPE CULVERT 1X1.8
BR NO.266 AT CH 102470.628m PIPE CULVERT 1X1.8
BR NO.267 AT CH 102971.042m PIPE CULVERT 1X1.8
BR NO.268 AT CH 103471.456m PIPE CULVERT 1X1.8
BR NO.269 AT CH 103971.870m PIPE CULVERT 1X1.8
BR NO.270 AT CH 104472.284m PIPE CULVERT 1X1.8
BR NO.271 AT CH 104972.698m PIPE CULVERT 1X1.8
BR NO.272 AT CH 105473.112m PIPE CULVERT 1X1.8
BR NO.273 AT CH 105973.526m PIPE CULVERT 1X1.8
BR NO.274 AT CH 106473.940m PIPE CULVERT 1X1.8
BR NO.275 AT CH 106974.354m PIPE CULVERT 1X1.8
BR NO.276 AT CH 107474.768m PIPE CULVERT 1X1.8
BR NO.277 AT CH 107975.182m PIPE CULVERT 1X1.8
BR NO.278 AT CH 108475.596m PIPE CULVERT 1X1.8
BR NO.279 AT CH 108976.010m PIPE CULVERT 1X1.8
BR NO.280 AT CH 109476.424m PIPE CULVERT 1X1.8
BR NO.281 AT CH 109976.838m PIPE CULVERT 1X1.8
BR NO.282 AT CH 110477.252m PIPE CULVERT 1X1.8
BR NO.283 AT CH 110977.666m PIPE CULVERT 1X1.8
BR NO.284 AT CH 111478.080m PIPE CULVERT 1X1.8
BR NO.285 AT CH 111978.494m PIPE CULVERT 1X1.8
BR NO.286 AT CH 112478.908m PIPE CULVERT 1X1.8
BR NO.287 AT CH 112979.322m PIPE CULVERT 1X1.8
BR NO.288 AT CH 113479.736m PIPE CULVERT 1X1.8
BR NO.289 AT CH 113980.150m PIPE CULVERT 1X1.8
BR NO.290 AT CH 114480.564m PIPE CULVERT 1X1.8
BR NO.291 AT CH 114980.978m PIPE CULVERT 1X1.8
BR NO.292 AT CH 115481.392m PIPE CULVERT 1X1.8
BR NO.293 AT CH 115981.806m PIPE CULVERT 1X1.8
BR NO.294 AT CH 116482.220m PIPE CULVERT 1X1.8
BR NO.295 AT CH 116982.634m PIPE CULVERT 1X1.8
BR NO.296 AT CH 117483.048m PIPE CULVERT 1X1.8
BR NO.297 AT CH 117983.462m PIPE CULVERT 1X1.8
BR NO.298 AT CH 118483.876m PIPE CULVERT 1X1.8
BR NO.299 AT CH 118984.290m PIPE CULVERT 1X1.8
BR NO.300 AT CH 119484.704m PIPE CULVERT 1X1.8
BR NO.301 AT CH 119985.118m PIPE CULVERT 1X1.8
BR NO.302 AT CH 120485.532m PIPE CULVERT 1X1.8
BR NO.303 AT CH 120985.946m PIPE CULVERT 1X1.8
BR NO.304 AT CH 121486.360m PIPE CULVERT 1X1.8
BR NO.305 AT CH 121986.774m PIPE CULVERT 1X1.8
BR NO.306 AT CH 122487.188m PIPE CULVERT 1X1.8
BR NO.307 AT CH 122987.602m PIPE CULVERT 1X1.8
BR NO.308 AT CH 123488.016m PIPE CULVERT 1X1.8
BR NO.309 AT CH 123988.430m PIPE CULVERT 1X1.8
BR NO.310 AT CH 124488.844m PIPE CULVERT 1X1.8
BR NO.311 AT CH 124989.258m PIPE CULVERT 1X1.8
BR NO.312 AT CH 125489.672m PIPE CULVERT 1X1.8
BR NO.313 AT CH 125990.086m PIPE CULVERT 1X1.8
BR NO.314 AT CH 126490.500m PIPE CULVERT 1X1.8
BR NO.315 AT CH 126990.914m PIPE CULVERT 1X1.8
BR NO.316 AT CH 127491.328m PIPE CULVERT 1X1.8
BR NO.317 AT CH 127991.742m PIPE CULVERT 1X1.8
BR NO.318 AT CH 128492.156m PIPE CULVERT 1X1.8
BR NO.319 AT CH 128992.570m PIPE CULVERT 1X1.8
BR NO.320 AT CH 129492.984m PIPE CULVERT 1X1.8
BR NO.321 AT CH 129993.398m PIPE CULVERT 1X1.8
BR NO.322 AT CH 130493.812m PIPE CULVERT 1X1.8
BR NO.323 AT CH 130994.226m PIPE CULVERT 1X1.8
BR NO.324 AT CH 131494.640m PIPE CULVERT 1X1.8
BR NO.325 AT CH 131995.054m PIPE CULVERT 1X1.8
BR NO.326 AT CH 132495.468m PIPE CULVERT 1X1.8
BR NO.327 AT CH 132995.882m PIPE CULVERT 1X1.8
BR NO.328 AT CH 133496.296m PIPE CULVERT 1X1.8
BR NO.329 AT CH 133996.710m PIPE CULVERT 1X1.8
BR NO.330 AT CH 134497.124m PIPE CULVERT 1X1.8
BR NO.331 AT CH 134997.538m PIPE CULVERT 1X1.8
BR NO.332 AT CH 135497.952m PIPE CULVERT 1X1.8
BR NO.333 AT CH 135998.366m PIPE CULVERT 1X1.8
BR NO.334 AT CH 136498.780m PIPE CULVERT 1X1.8
BR NO.335 AT CH 136999.194m PIPE CULVERT 1X1.8
BR NO.336 AT CH 137499.608m PIPE CULVERT 1X1.8
BR NO.337 AT CH 137999.822m PIPE CULVERT 1X1.8
BR NO.338 AT CH 138500.236m PIPE CULVERT 1X1.8
BR NO.339 AT CH 139000.650m PIPE CULVERT 1X1.8
BR NO.340 AT CH 139501.064m PIPE CULVERT 1X1.8
BR NO.341 AT CH 140001.478m PIPE CULVERT 1X1.8
BR

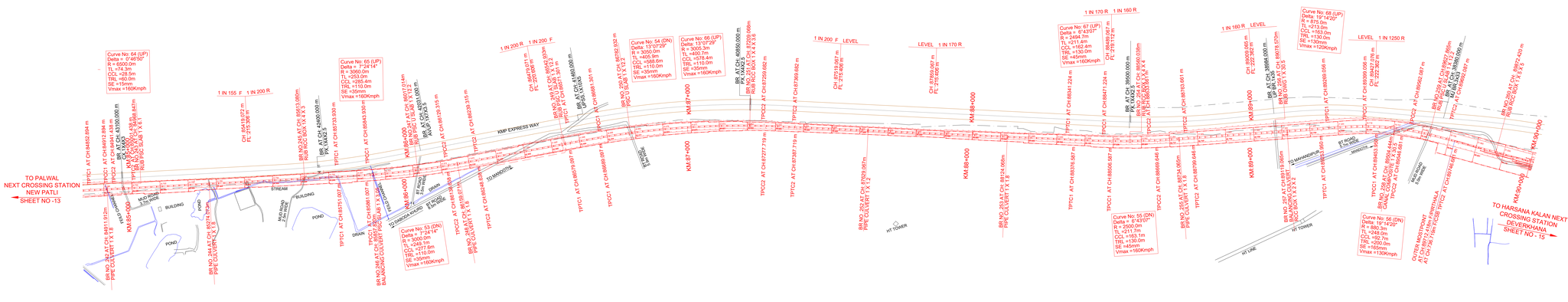

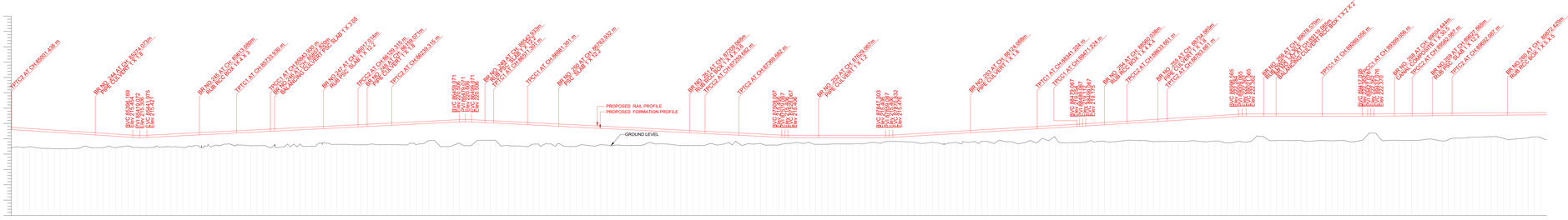

HORIZONTAL ALIGNMENT	TRL=60m · L=732.491m · TRL=110m · R =3060m · TRL=110m · L=331.986m · TRL=110m · R =3005m · TRL=110m · L=971.542m · TRL=130m · R =2495m · TRL=130m · L=505.395m · TRL=130m · R =875m · TRL=130m · L=1601.218m
VERTICAL ALIGNMENT	L=578.194m 1 IN 122.F · L=49.806m R=-4000.0m · L=1017.055m 1 IN 200 R · L=40.090m R=4000.0m · L=1009.997m 1 IN 200 F · L=20.000m R=-4000.04m · L=318.235m LEVEL · L=23.120m R=-4000.06m · L=608.235m 1 in 170 R · L=28.000m R=-5499.19m · L=497.498m 1 in 160 R · L=25.000m R=4000.07m · L=355.511m LEVEL · L=20.000m R=-20000.37m · L=1626.934m 1 in 1250 R
DEPTH OF CUTTING (-) HIGHT OF BANKING (+)	
PROPOSED RAIL LEVEL	
PROPOSED FORMATION LEVEL	
GROUND LEVELS	
CHAINAGES	

LONGITUDINAL PROFILE
HORIZONTAL =1000, VERTICAL =100

LEGEND:
- EXISTING RAILWAY TRACK
- PROPOSED UP & DN LINE
- DISMANTLING WORKS
- PROPOSED DIVERSIONS
- EXISTING ROAD
- PRO.HORC BOUNDARY
- EXPRESSWAY BOUNDARY
- HT LINE
- ELECTRICAL LINE(LT)
- STREAM / CANAL / DRAIN
- WELL
- POND
- PRO.TOE LINE

NOTE:-
1. ALL DIMENSIONS ARE IN METRE UNLESS OTHERWISE STATED
2. ALL THE LEVELS ARE WITH RESPECT TO MEAN SEA LEVEL
3. TRACK CETRE BETWEEN MAIN LINES OF HORC HAS BEEN KEPT AS MIN 5.30m
4. PUBLIC UTILITIES HT/LT LINES OFC CABLES WATER /SEWER LINES ETC INTERFERING WITH DFC TRACKS SHALL BE RELOCATED.
5. ARRANGEMENT & SIZE OF THE BRIDGE SHOWN IN THE DRAWING IS TENTATIVE AND MAY CHANGE AS PER THE APPROVED GAD.
6. VERTICAL CLEARANCE FROM LOWEST CONDUCTOR OF HT POWER LINE TO PROPOSED RAIL LEVEL ARE SHOWN

PROPOSED TRACK STRUCTURE (TO SUIT FOR 25T AXLE LOAD)

I. FOR RAIL CORRIDOR: 160KMPH Speed
* TRACK = 60KG RAILS
* SLEEPER DENSITY : PSC SLEEPERS = 1660 No.S PER KM
* BALLAST CUSHION : 350mm
* ALL TURNOUTS ARE : 1 in 12 UNLESS OTHERWISE SPECIFIED.

ABBREVIATIONS:-
1. BVC - BEGIN OF VERTICAL CURVE
2. PVI - POINT OF VERTICAL INTERSECTION
2. EVC - END OF VERTICAL CURVE

LEGEND FOR PROFILE :
- PROPOSED RAIL PROFILE
- PROPOSED FORMATION PROFILE
- GROUND PROFILE

GC/HORC		HRIDC	
NAME / DESIGNATION	SIGN	NAME / DESIGNATION	SIGN
CHAHATEY RAM PD		SHIV OM DWIVEDI CPM/HRIDC	
SUDHIR AGRAWAL DPD/CIVIL		ABHISHEK DAS DGM/C/NORTH	
KRISHAN CHAND SAINSI CRE/CIVIL			

PROJECT:
HARYANA ORBITAL RAIL CORRIDOR
CONNECTING PALWAL TO SONIPAT BYPASSING DELHI AREA BY LINKING ASAOTI-PATLI-SULTANPUR-ASAUDAH BY NEW ELECTRIFIED BG DOUBLE LINE

CLIENT:
HARYANA RAIL INFRASTRUCTURE DEVELOPMENT CORPORATION LIMITED.

GENERAL CONSULTANT:
GENERAL CONSULTANT FOR HARYANA ORBITAL RAIL CORRIDOR
RITES Limited in consortium with SMEC International Pty. Ltd.

GC DRG.NO.

TITLE :
PLAN & LONGITUDINAL SECTION
(85.0km TO 90.0km)

CONSULTANTS :
aarvee associates
architects engineers & consultants pvt.ltd.
Revuta Residency, Srinagar Colony, Main Rd., Hyderabad-82, India
Tel. 91+40-23737333, Fax. 91+40-23736377,
e-mail: aahoo@aarvee.net, web:www.aarvee.net

AARVEE ASSOCIATES

TANMAY (AM CAD)	G.PRASAD (M)	N.J. RAO (VP)
DRAWN	CHECKED	APPROVED

DRG.NO. AA/2245/AL/DR/P&P/R3 | SHEET No. 16 OF 24
SCALE : H = 1:5000 V = 1:500 | ISSUED DT: 26.11.2019 | REV DT: 06-08-2022

LEGEND:

- EXISTING RAILWAY TRACK
- PROPOSED UP & DN LINE
- DISMANTLING WORKS
- PROPOSED DIVERSIONS
- EXISTING ROAD
- PRO.HORC BOUNDARY
- EXPRESSWAY BOUNDARY
- HT LINE
- ELECTRICAL LINE(LT)
- STREAM / CANAL / DRAIN
- WELL
- POND
- PRO.TOE LINE

NOTE:-

1. ALL DIMENSIONS ARE IN METRE UNLESS OTHERWISE STATED
2. ALL THE LEVELS ARE WITH RESPECT TO MEAN SEA LEVEL
3. TRACK CETRE BETWEEN MAIN LINES OF HORC HAS BEEN KEPT AS MIN 5.30m
4. PUBLIC UTILITIES HT/LT LINES OFC CABLES WATER /SEWER LINES ETC INTERFERING WITH DFC TRACKS SHALL BE RELOCATED.
5. ARRANGEMENT & SIZE OF THE BRIDGE SHOWN IN THE DRAWING IS TENTATIVE AND MAY CHANGE AS PER THE APPROVED GAD.
6. VERTICAL CLEARANCE FROM LOWEST CONDUCTOR OF HT POWER LINE TO PROPOSED RAIL LEVEL ARE SHOWN

PROPOSED TRACK STRUCTURE (TO SUIT FOR 25T AXLE LOAD)

I. FOR RAIL CORRIDOR :160KMPH Speed
* TRACK = 60KG RAILS
* SLEEPER DENSITY : PSC SLEEPERS = 1660 No.S PER KM
* BALLAST CUSHION : 350mm
* ALL TURNOUTS ARE 1 in 12 UNLESS OTHERWISE SPECIFIED.

ABBREVIATIONS:-

1. BVC - BEGIN OF VERTICAL CURVE
2. PVI - POINT OF VERTICAL INTERSECTION
2. EVC - END OF VERTICAL CURVE

LEGEND FOR PROFILE :

- PROPOSED RAIL PROFILE
- PROPOSED FORMATION PROFILE
- GROUND PROFILE

GC/HORC		HRIDC	
NAME / DESIGNATION	SIGN	NAME / DESIGNATION	SIGN
CHAHATEY RAM PD		SHIV OM DWIVEDI CPM/HRIDC	
SUDHIR AGRAWAL DPD/CIVIL		ABHISHEK DAS DGM/C/NORTH	
KRISHAN CHAND SAINSI CRE/CIVIL			

PROJECT:
HARYANA ORBITAL RAIL CORRIDOR
CONNECTING PALWAL TO SONIPAT BYPASSING DELHI AREA BY LINKING ASAOTI/PATLI-SULTANPUR-ASAUDAH BY NEW ELECTRIFIED BG DOUBLE LINE

CLIENT:
HARYANA RAIL INFRASTRUCTURE DEVELOPMENT CORPORATION LIMITED.

GENERAL CONSULTANT:
GENERAL CONSULTANT FOR
HARYANA ORBITAL RAIL CORRIDOR
RITES Limited in consortium with SMEC International Pty. Ltd.

GC DRG.NO.

TITLE :
PLAN & LONGITUDINAL SECTION
(90.0km TO 95.0km)

CONSULTANTS
aarvee associates
architects engineers & consultants pvt.ltd.
Ravina Residency, Srinagar Colony Main Rd., Hyderabad(A.P), India
Tel: 91-40-23737633, Fax: 91-40-23736777,
e-mail: railways@aarvee.net, web:www.aarvee.net

AARVEE ASSOCIATES

DRAWN	CHECKED	APPROVED
TANMAY (AM CAD)	G.PRASAD (M)	N.J. RAO (VP)

DRG.NO. AA/2245/ALD/DR/P&P/R3 | SHEET No. 17 OF 24
SCALE : H = 1:500 V = 1:500 | ISSUED Dt: 26.11.2019 | REV Dt: 06-08-2022

LONGITUDINAL PROFILE
HORIZONTAL SCALE 1:500 VERTICAL SCALE 1:500

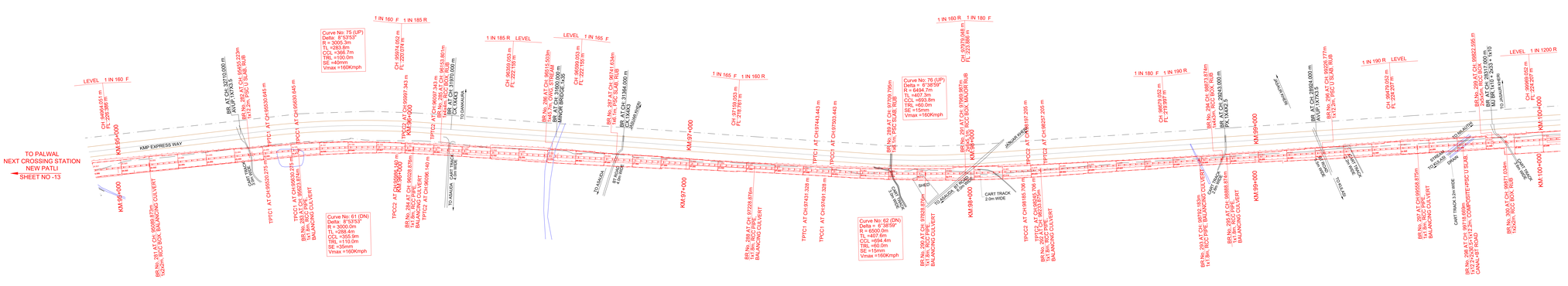

LEGEND:
- EXISTING RAILWAY TRACK
- PROPOSED UP & DN LINE
- DISMANTLING WORKS
- PROPOSED DIVERSIONS
- EXISTING ROAD
- PRO.HORC BOUNDARY
- EXPRESSWAY BOUNDARY
- HT LINE
- ELECTRICAL LINE(LT)
- STREAM / CANAL / DRAIN
- WELL
- POND
- PRO.TOE LINE

NOTE:-
1. ALL DIMENSIONS ARE IN METRE UNLESS OTHERWISE STATED
2. ALL THE LEVELS ARE WITH RESPECT TO MEAN SEA LEVEL
3. TRACK CETRE BETWEEN MAIN LINES OF HORC HAS BEEN KEPT AS MIN 5.30m
4. PUBLIC UTILITIES HT/LT LINES OFC CABLES WATER /SEWER LINES ETC INTERFERING WITH DFC TRACKS SHALL BE RELOCATED
5. ARRANGEMENT & SIZE OF THE BRIDGE SHOWN IN THE DRAWING IS TENTATIVE AND MAY CHANGE AS PER THE APPROVED GAD.
6. VERTICAL CLEARANCE FROM LOWEST CONDUCTOR OF HT POWER LINE TO PROPOSED RAIL LEVEL ARE SHOWN

PROPOSED TRACK STRUCTURE (TO SUIT FOR 25T AXLE LOAD)

I. FOR RAIL CORRIDOR- 160KMPH Speed
* TRACK = 60KG RAILS
* SLEEPER DENSITY : PSC SLEEPERS = 1660 No.S PER KM
* BALLAST CUSHION : 350mm
* ALL TURNOUTS ARE 1 in 12 UNLESS OTHERWISE SPECIFIED.

ABBREVIATIONS:-
1. BVC - BEGIN OF VERTICAL CURVE
2. PVI - POINT OF VERTICAL INTERSECTION
2. EVC - END OF VERTICAL CURVE

LEGEND FOR PROFILE :
- PROPOSED RAIL PROFILE
- PROPOSED FORMATION PROFILE
- GROUND PROFILE

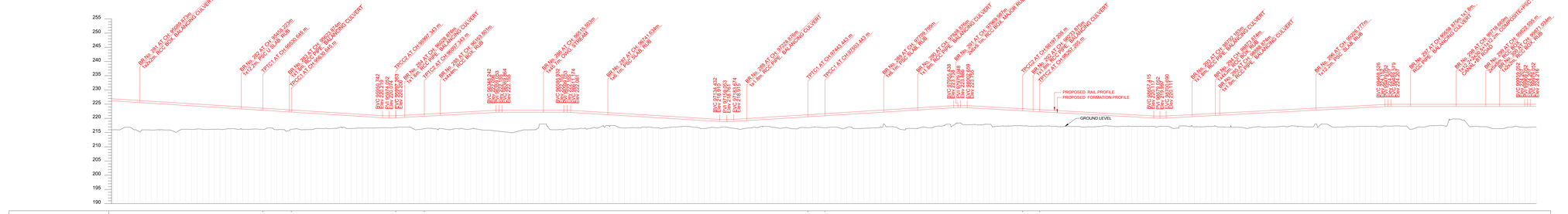

LONGITUDINAL PROFILE
HORIZONTAL 1:5000 VERTICAL 1:100

GC/HORC		HRIDC	
NAME / DESIGNATION	SIGN	NAME / DESIGNATION	SIGN
CHAHATEY RAM PD		SHIV OM DWIVEDI CPM/HRIDC	
SUDHIR AGRAWAL DPD/CIVIL		ABHISHEK DAS DGM/C/NORTH	
KRISHAN CHAND SAINSI CRE/CIVIL			

PROJECT:
HARYANA ORBITAL RAIL CORRIDOR
CONNECTING PALWAL TO SONIPAT BYPASSING DELHI AREA BY LINKING ASAOTLI-PATLI-SULTANPUR-ASAUDAH BY NEW ELECTRIFIED BG DOUBLE LINE.

CLIENT:
HARYANA RAIL INFRASTRUCTURE DEVELOPMENT CORPORATION LIMITED.

GENERAL CONSULTANT:
GENERAL CONSULTANT FOR
HARYANA ORBITAL RAIL CORRIDOR
RITES Limited in consortium with SMEC International Pty. Ltd.

GC DRG.NO.

TITLE :
PLAN & LONGITUDINAL SECTION
(95.0km TO 100.0km)

CONSULTANTS
aarvee associates
architects engineers & consultants pvt.ltd.
Ravuta Residency, Srinagar Colony Main Rd., Hyderabad(I), India
Tel: 91-40-23737633, Fax: 91-40-23738277,
e-mail: railways@aarvee.net, web:www.aarvee.net

AARVEE ASSOCIATES

DRAWN	CHECKED	APPROVED
TANMAY (AM CAD)	G.PRASAD (M)	N.J. RAO (VP)

DRG.NO. AA/2245/ALD/DR/P&P/R3 | SHEET No. 18 OF 24
SCALE : H = 1:5000 V = 1:500 | ISSUED Dt: 26.11.2019 | REV Dt: 06-08-2022

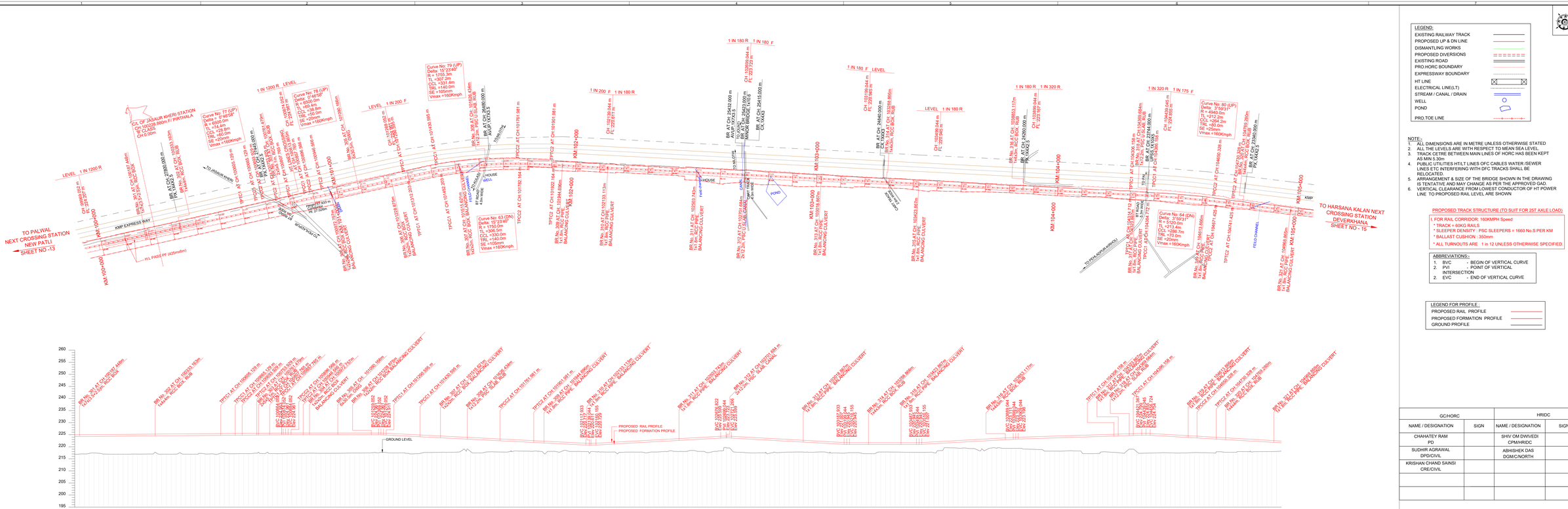
TO PALWAL NEXT CROSSING STATION NEW PATLI SHEET NO -13
CL OF JSAUR KHERI STATION CH 100208.880m P/ PARTHALA CL CLOSED CH 0.00m
Curve No.: 77 (UP) Delta : 0°.46'58" R = 5900.0m TL =24.8m GCL =48.0m SE =20mm Vmax =160Kmph
Curve No.: 78 (UP) Delta : 0°.46'58" R = 6000.0m TL =25.2m GCL =49.4m SE =20mm Vmax =160Kmph
Curve No: 79 (UP) Delta: 15°.23'40" R = 1755.3m TL =236.0m GCL =466.4m SE =105mm Vmax =160Kmph
Curve No: 63 (DN) Delta: 15°.23'40" R = 1756.0m TL =236.0m GCL =466.4m SE =105mm Vmax =160Kmph
Curve No: 80 (UP) Delta : 3°.59'31" R = 4940.0m TL =212.2m GCL =264.2m SE =25mm Vmax =160Kmph
Curve No: 64 (DN) Delta : 3°.59'31" R = 5120.0m TL =213.4m GCL =286.7m SE =30mm Vmax =160Kmph
KM 100+000
KM 101+000
KM 102+000
KM 103+000
KM 104+000
KM 105+000
KMP
TO HARSANA KALAN NEXT CROSSING STATION DEVERKHANA SHEET NO - 15
TO PALWAL (KPM-46km/U)
H.L PASS PF (425mx6m)
KMP EXPRESS WAY
TO JSAUR KHERI
TO HARSANA KALAN
TO PARTHALA
SCHOOL
POND
HOUSE
TEMPLE
FENCE
FENCE CHANNEL
LEVEL 1 IN 1200 R
1 IN 200 F
1 IN 180 R
1 IN 180 F
1 IN 320 R
1 IN 175 F
LEVEL
BR No. 301 AT CH 100208.880m: 1*4.0m RCC BOX
BR No. 302 AT CH 100703.180m: 1*4.0m RCC BOX
BR No. 303 AT CH 101097.445m: 1*4.0m RCC BOX
BR No. 304 AT CH 101315.203m: 1*4.0m RCC BOX
BR No. 305 AT CH 101528.870m: 1*4.0m RCC BOX
BR No. 306 AT CH 101742.168m: 1*4.0m RCC BOX
BR No. 307 AT CH 101961.981m: 1*4.0m RCC BOX
BR No. 308 AT CH 102179.844m: 1*4.0m RCC BOX
BR No. 309 AT CH 102398.656m: 1*4.0m RCC BOX
BR No. 310 AT CH 102617.133m: 1*4.0m RCC BOX
BR No. 311 AT CH 102833.742m: 1*4.0m RCC PIPE
BR No. 312 AT CH 103053.222m: 1*4.0m RCC PIPE
BR No. 313 AT CH 103272.644m: 1*4.0m RCC PIPE
BR No. 314 AT CH 103488.866m: 1*4.0m RCC PIPE
BR No. 315 AT CH 103707.288m: 1*4.0m RCC PIPE
BR No. 316 AT CH 103926.033m: 1*4.0m RCC PIPE
BR No. 317 AT CH 104143.425m: 1*4.0m RCC PIPE
BR No. 318 AT CH 104360.338m: 1*4.0m RCC PIPE
BR No. 319 AT CH 104577.750m: 1*4.0m RCC PIPE
BR No. 320 AT CH 104795.663m: 1*4.0m RCC PIPE
BR No. 321 AT CH 105013.575m: 1*4.0m RCC PIPE
BR No. 322 AT CH 105231.488m: 1*4.0m RCC PIPE
BR No. 323 AT CH 105449.400m: 1*4.0m RCC PIPE
BR No. 324 AT CH 105668.865m: 1*4.0m RCC PIPE
BR No. 325 AT CH 105886.777m: 1*4.0m RCC PIPE
BR No. 326 AT CH 106104.690m: 1*4.0m RCC PIPE
BR No. 327 AT CH 106322.602m: 1*4.0m RCC PIPE
BR No. 328 AT CH 106540.515m: 1*4.0m RCC PIPE
BR No. 329 AT CH 106758.428m: 1*4.0m RCC PIPE
BR No. 330 AT CH 106976.340m: 1*4.0m RCC PIPE
BR No. 331 AT CH 107194.253m: 1*4.0m RCC PIPE
BR No. 332 AT CH 107412.165m: 1*4.0m RCC PIPE
BR No. 333 AT CH 107630.078m: 1*4.0m RCC PIPE
BR No.

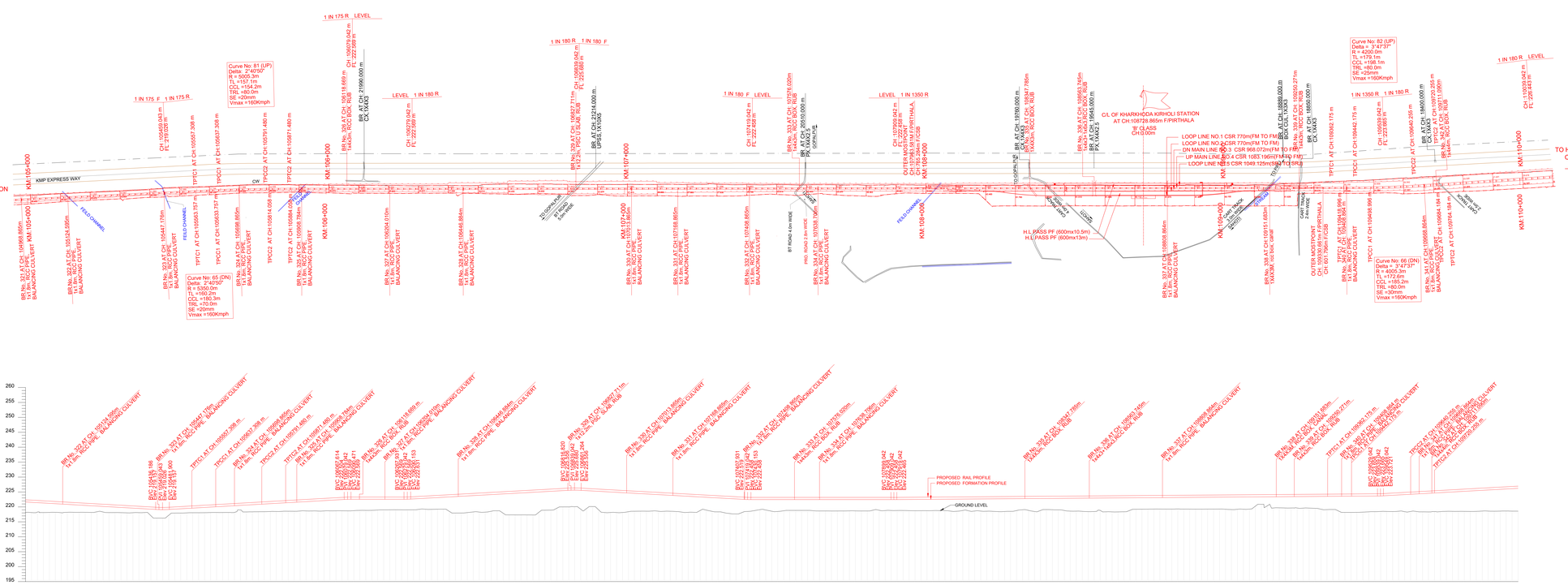

LEGEND:
- EXISTING RAILWAY TRACK
- PROPOSED UP & DN LINE
- DISMANTLING WORKS
- PROPOSED DIVERSIONS
- EXISTING ROAD
- PRO.HORC BOUNDARY
- EXPRESSWAY BOUNDARY
- HT LINE
- ELECTRICAL LINE(LT)
- STREAM / CANAL / DRAIN
- WELL
- POND
- PRO.TOE LINE

NOTE:-
1. ALL DIMENSIONS ARE IN METRE UNLESS OTHERWISE STATED
2. ALL THE LEVELS ARE WITH RESPECT TO MEAN SEA LEVEL
3. TRACK CETRE BETWEEN MAIN LINES OF HORC HAS BEEN KEPT AS MIN 5.30m
4. PUBLIC UTILITIES HT/LT LINES OFC CABLES WATER /SEWER LINES ETC INTERFERING WITH DFC TRACKS SHALL BE RELOCATED.
5. ARRANGEMENT & SIZE OF THE BRIDGE SHOWN IN THE DRAWING IS TENTATIVE AND MAY CHANGE AS PER THE APPROVED GAD.
6. VERTICAL CLEARANCE FROM LOWEST CONDUCTOR OF HT POWER LINE TO PROPOSED RAIL LEVEL ARE SHOWN

PROPOSED TRACK STRUCTURE (TO SUIT FOR 25T AXLE LOAD)

I. FOR RAIL CORRIDOR: 160KMPH Speed
* TRACK = 60KG RAILS
* SLEEPER DENSITY : PSC SLEEPERS = 1660 No.S PER KM
* BALLAST CUSHION : 350mm
* ALL TURNOUTS ARE 1 in 12 UNLESS OTHERWISE SPECIFIED.

ABBREVIATIONS:-
1. BVC - BEGIN OF VERTICAL CURVE
2. PVI - POINT OF VERTICAL INTERSECTION
3. EVC - END OF VERTICAL CURVE

LEGEND FOR PROFILE:-
- PROPOSED RAIL PROFILE
- PROPOSED FORMATION PROFILE
- GROUND PROFILE

GC/HORC		HRIDC	
NAME / DESIGNATION	SIGN	NAME / DESIGNATION	SIGN
CHAHATEY RAM PD		SHIV OM DWIVEDI CPM/HRIDC	
SUDHIR AGRAWAL DPD/CIVIL		ABHISHEK DAS DGM/C/NORTH	
KRISHAN CHAND SAINSI CRE/CIVIL			

PROJECT:
HARYANA ORBITAL RAIL CORRIDOR
CONNECTING PALWAL TO SONIPAT BYPASSING DELHI AREA BY LINKING ASAOTI-PATLI-SULTANPUR-ASAUDAH BY NEW ELECTRIFIED BG DOUBLE LINE.

CLIENT:
HARYANA RAIL INFRASTRUCTURE DEVELOPMENT CORPORATION LIMITED.

GENERAL CONSULTANT:
GENERAL CONSULTANT FOR
HARYANA ORBITAL RAIL CORRIDOR
RITES Limited in consortium with SMEC International Pty. Ltd.

GC DRG.NO.

TITLE :
PLAN & LONGITUDINAL SECTION
(105.0km TO 110.0km)

CONSULTANTS :
aarvee associates
architects engineers & consultants pvt.ltd.
Ravuta Residency, Srinagar Colony Main Rd., Hyderabad-500 045, India
Tel: 91-40-23737633, Fax: 91-40-23736277,
e-mail: aahyd@aarvee.net, web:www.aarvee.net

AARVEE ASSOCIATES

DRAWN	CHECKED	APPROVED
TANMAY (AM CAD)	G.PRASAD (M)	N.J. RAO (VP)

DRG.NO. AA/2245/ALD/DR/P&P/R3 | SHEET No. 20 OF 24
SCALE : H = 1:5000 V = 1:500 | ISSUED Dt: 26.11.2019 | REV Dt: 06-08-2022

LONGITUDINAL PROFILE
HORIZONTAL:1:5000 VERTICAL:1:500

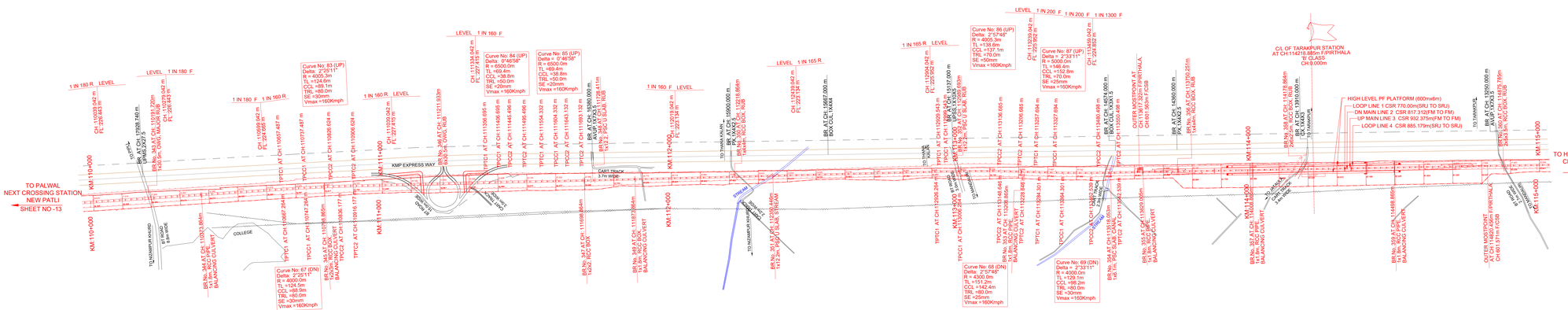

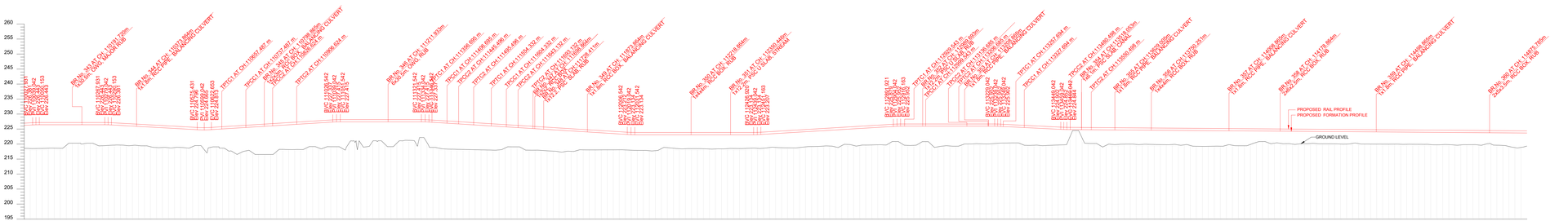

LEGEND:
- EXISTING RAILWAY TRACK
- PROPOSED UP & DN LINE
- DISMANTLING WORKS
- PROPOSED DIVERSIONS
- EXISTING ROAD
- PRO.HORC BOUNDARY
- EXPRESSWAY BOUNDARY
- HT LINE
- ELECTRICAL LINE(LT)
- STREAM / CANAL / DRAIN
- WELL
- POND
- PRO.TOE LINE

NOTE:-
1. ALL DIMENSIONS ARE IN METRE UNLESS OTHERWISE STATED
2. ALL THE LEVELS ARE WITH RESPECT TO MEAN SEA LEVEL
3. TRACK CETRE BETWEEN MAIN LINES OF HORC HAS BEEN KEPT AS MIN 5.30m
4. PUBLIC UTILITIES HT/LT LINES OFC CABLES WATER /SEWER LINES ETC INTERFERING WITH DFC TRACKS SHALL BE RELOCATED
5. ARRANGEMENT & SIZE OF THE BRIDGE SHOWN IN THE DRAWING IS TENTATIVE AND MAY CHANGE AS PER THE APPROVED GAD
6. VERTICAL CLEARANCE FROM LOWEST CONDUCTOR OF HT POWER LINE TO PROPOSED RAIL LEVEL ARE SHOWN

ABBREVIATIONS:-
1. BVC - BEGIN OF VERTICAL CURVE
2. PVI - POINT OF VERTICAL INTERSECTION
2. EVC - END OF VERTICAL CURVE

LEGEND FOR PROFILE :
- PROPOSED RAIL PROFILE
- PROPOSED FORMATION PROFILE
- GROUND PROFILE

GC/HORC		HRIDC	
NAME / DESIGNATION	SIGN	NAME / DESIGNATION	SIGN
CHAHATEY RAM PD		SHIV OM DWIVEDI CPM/HRIDC	
SUDHIR AGRAWAL DPD/CIVIL		ABHISHEK DAS DGM/C/NORTH	
KRISHAN CHAND SAINSI CRE/CIVIL			

PROJECT:
HARYANA ORBITAL RAIL CORRIDOR
CONNECTING PALWAL TO SONIPAT BYPASSING DELHI AREA BY LINKING ASAOTI-PATLI-SULTANPUR-ASAUDAH BY NEW ELECTRIFIED BG DOUBLE LINE.

CLIENT:
HARYANA RAIL INFRASTRUCTURE DEVELOPMENT CORPORATION LIMITED.

GENERAL CONSULTANT:
GENERAL CONSULTANT FOR HARYANA ORBITAL RAIL CORRIDOR
RITES Limited in consortium with SMEC International Pty. Ltd.

GC DRG.NO.

TITLE :
PLAN & LONGITUDINAL SECTION
(110.0km TO 115.0km)

CONSULTANTS :
aarvee associates
architects engineers & consultants pvt. ltd.
Rauna Residency, Srinagar Colony Main Rd., Hyderabad-82, India
Tel: 91-40-23751533, Fax: 91-40-23736077
e-mail: railway@aarvee.net, web:www.aarvee.net

AARVEE ASSOCIATES

DRG.NO. AA/2245/AL/DR/P&P/R3	SHEET No. 21 OF 24	
SCALE : H = 1:5000 V = 1:500	ISSUED Dt: 26.11.2019	REV Dt: 06-08-2022

	DRAWN	CHECKED	APPROVED
TANMAY (AM CAD)	G.PRASAD (M)	N. J. RAO (VP)	

LONGITUDINAL PROFILE
HORIZONTAL 1:5000, VERTICAL 1:500

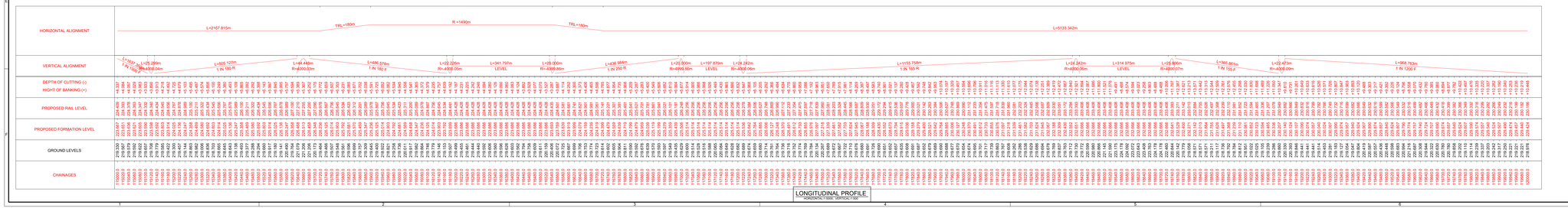

LONGITUDINAL PROFILE
HORIZONTAL 1 INCH = 200 METRES / VERTICAL 1 INCH = 5 METRES

LEGEND:

- EXISTING RAILWAY TRACK
- PROPOSED UP & DN LINE
- DISMANTLING WORKS
- PROPOSED DIVERSIONS
- EXISTING ROAD
- PRO.HORC BOUNDARY
- EXPRESSWAY BOUNDARY
- HT LINE
- ELECTRICAL LINE(LT)
- STREAM / CANAL / DRAIN
- WELL
- POND
- PRO.TOE LINE

NOTE:-

1. ALL DIMENSIONS ARE IN METRE UNLESS OTHERWISE STATED
2. ALL THE LEVELS ARE WITH RESPECT TO MEAN SEA LEVEL
3. TRACK CETRE BETWEEN MAIN LINES OF HORC HAS BEEN KEPT AS MIN 5.30m
4. PUBLIC UTILITIES HT/LT LINES OFC CABLES WATER /SEWER LINES ETC INTERFERING WITH DFC TRACKS SHALL BE RELOCATED.
5. ARRANGEMENT & SIZE OF THE BRIDGE SHOWN IN THE DRAWING IS TENTATIVE AND MAY CHANGE AS PER THE APPROVED GAD.
6. VERTICAL CLEARANCE FROM LOWEST CONDUCTOR OF HT POWER LINE TO PROPOSED RAIL LEVEL ARE SHOWN

PROPOSED TRACK STRUCTURE (TO SUIT FOR 25T AXLE LOAD)

I. FOR RAIL CORRIDOR: 160KMPH Speed

- * TRACK = 60KG RAILS
- * SLEEPER DENSITY : PSC SLEEPERS = 1660 No.S PER KM
- * BALLAST CUSHION : 350mm
- * ALL TURNOUTS ARE 1 in 12 UNLESS OTHERWISE SPECIFIED.

ABBREVIATIONS:-

1. BVC - BEGIN OF VERTICAL CURVE
2. PVI - POINT OF VERTICAL INTERSECTION
3. EVC - END OF VERTICAL CURVE

LEGEND FOR PROFILE :

- PROPOSED RAIL PROFILE
- PROPOSED FORMATION PROFILE
- GROUND PROFILE

GC/HORC		HRIDC	
NAME / DESIGNATION	SIGN	NAME / DESIGNATION	SIGN
CHHAHTEY RAM PD		SHIV OM DWIVEDI CPM/HRIDC	
SUDHIR AGRAWAL DPD/CIVIL		ABHISHEK DAS DGM/C/NORTH	
KRISHAN CHAND SAINSI CRE/CIVIL			

PROJECT:
HARYANA ORBITAL RAIL CORRIDOR
CONNECTING PALWAL TO SONIPAT BYPASSING DELHI AREA BY LINKING ASAOTI-PATLI-SULTANPUR-ASAUDAH BY NEW ELECTRIFIED BG DOUBLE LINE

CLIENT:
HARYANA RAIL INFRASTRUCTURE DEVELOPMENT CORPORATION LIMITED.

GENERAL CONSULTANT:
GENERAL CONSULTANT FOR HARYANA ORBITAL RAIL CORRIDOR
RITES Limited in consortium with SMEC International Pty. Ltd.

GC DRG.NO.:

TITLE :
PLAN & LONGITUDINAL SECTION
(115.0km TO 120.0km)

CONSULTANTS :
aarvee associates
architects engineers & consultants pvt.ltd.
Revankar Building, Asaram Baug, Panchpakhadi, THANE 400 602, India
Tel: 91-22-25372525, Fax: 91-22-25372577
e-mail: aarvee@aarveeassociates.com

AARVEE ASSOCIATES

DRAWN	CHECKED	APPROVED
TANMAY (AM CAD)	G.PRASAD (M)	N.J. RAO (VP)

DRG.NO.: AA/2245/ALOR/P&P/R3 | SHEET No. 22 OF 24
SCALE : H = 1:5000 V = 1:500 | ISSUED Dt. 26.11.2019 | REV Dt: 06-08-2022

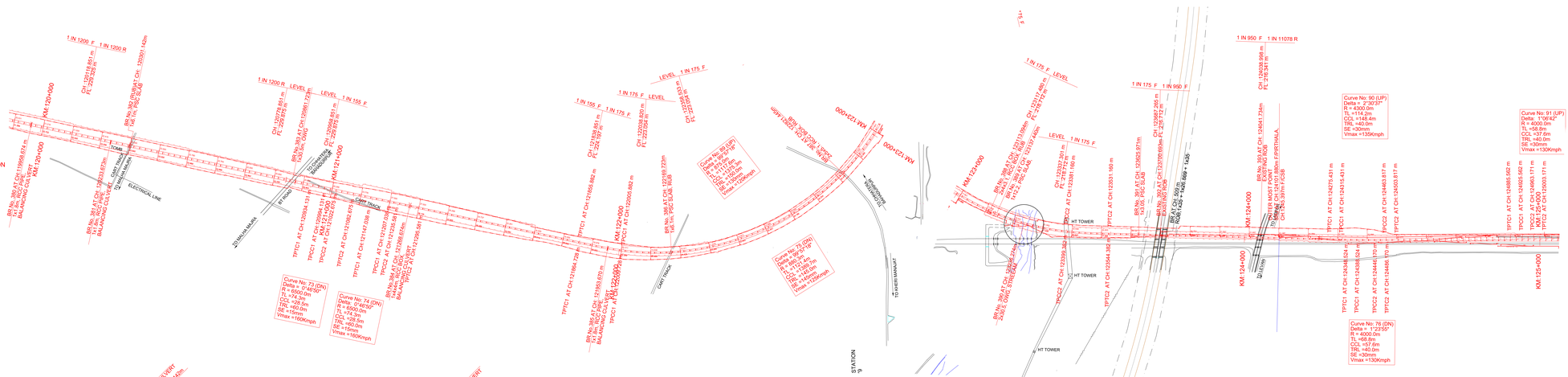

LEGEND:

- EXISTING RAILWAY TRACK
- PROPOSED UP & DN LINE
- DISMANTLING WORKS
- PROPOSED DIVERSIONS
- EXISTING ROAD
- PRO.HORC BOUNDARY
- EXPRESSWAY BOUNDARY
- HT LINE
- ELECTRICAL LINE(LT)
- STREAM / CANAL / DRAIN
- WELL
- POND
- PRO.TOE LINE

NOTE:-

1. ALL DIMENSIONS ARE IN METRE UNLESS OTHERWISE STATED
2. ALL THE LEVELS ARE WITH RESPECT TO MEAN SEA LEVEL
3. TRACK CETRE BETWEEN MAIN LINES OF HORC HAS BEEN KEPT AS MIN 5.30m
4. PUBLIC UTILITIES HT/LT LINES OFC CABLES WATER /SEWER LINES ETC INTERFERING WITH DFC TRACKS SHALL BE RELOCATED.
5. ARRANGEMENT & SIZE OF THE BRIDGE SHOWN IN THE DRAWING IS TENTATIVE AND MAY CHANGE AS PER THE APPROVED GAD.
6. VERTICAL CLEARANCE FROM LOWEST CONDUCTOR OF HT POWER LINE TO PROPOSED RAIL LEVEL ARE SHOWN

PROPOSED TRACK STRUCTURE (TO SUIT FOR 25T AXLE LOAD)

I. FOR RAIL CORRIDOR: 160KMPH Speed
* TRACK = 60KG RAILS
* SLEEPER DENSITY : PSC SLEEPERS = 1660 No.S PER KM
* BALLAST CUSHION : 350mm
* ALL TURNOUTS ARE 1 in 12 UNLESS OTHERWISE SPECIFIED.

ABBREVIATIONS:-

1. BVC - BEGIN OF VERTICAL CURVE
2. PVI - POINT OF VERTICAL INTERSECTION
2. EVC - END OF VERTICAL CURVE

LEGEND FOR PROFILE :

- PROPOSED RAIL PROFILE
- PROPOSED FORMATION PROFILE
- GROUND PROFILE

GC/HORC		HRIDC	
NAME / DESIGNATION	SIGN	NAME / DESIGNATION	SIGN
CHAHATEY RAM PD		SHIV OM DWIVEDI CPM/HRIDC	
SUDHIR AGRAWAL DPD/O/VL		ABHISHEK DAS DGM/C/NORTH	
KRISHAN CHAND SAINSI CRE/CIVIL			

PROJECT:	HARYANA ORBITAL RAIL CORRIDOR CONNECTING PALWAL TO SONIPAT BYPASSING DELHI AREA BY LINKING ASAOTI-PATLI-SULTANPUR-ASAUDAH BY NEW ELECTRIFIED BG DOUBLE LINE.
CLIENT:	HARYANA RAIL INFRASTRUCTURE DEVELOPMENT CORPORATION LIMITED.
GENERAL CONSULTANT:	GENERAL CONSULTANT FOR HARYANA ORBITAL RAIL CORRIDOR RITES Limited in consortium with SMEC International Pty. Ltd.
GC DRG.NO.	
TITLE :	PLAN & LONGITUDINAL SECTION (120.0km TO 125.0km)
CONSULTANTS :	aarvee associates architects engineers & consultants pvt.ltd. Ravuta Residency, Srinagar Colony Main Rd., Hyderabad-82, India Tel: 91-40-23737633, Fax: 91-40-23736277 e-mail: rakesa@aarvee.net, web:www.aarvee.net AARVEE ASSOCIATES
	TANMAY (AM CAD) / G.PRASAD (M) DRAWN / CHECKED / N.J. RAO (VP) APPROVED
DRG.NO. AA/2245/ALD/DR/P&P/R3	SHEET No. 23 OF 24
SCALE : H = 1:5000 V = 1:500	ISSUED Dt. 26.11.2019 / REV Dt. 06-08-2022

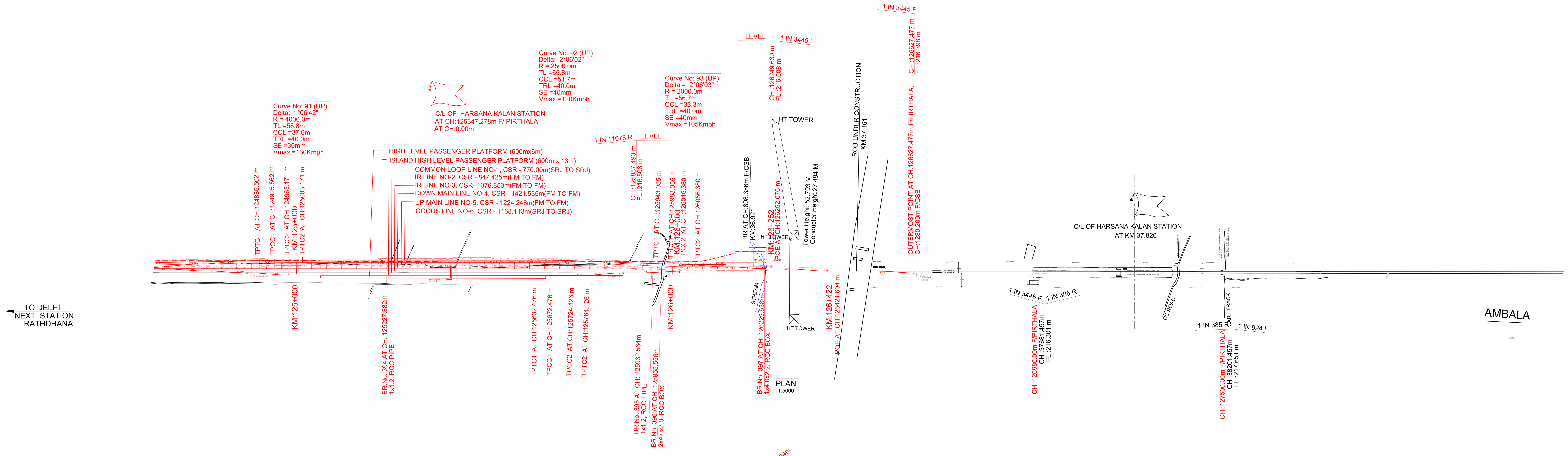

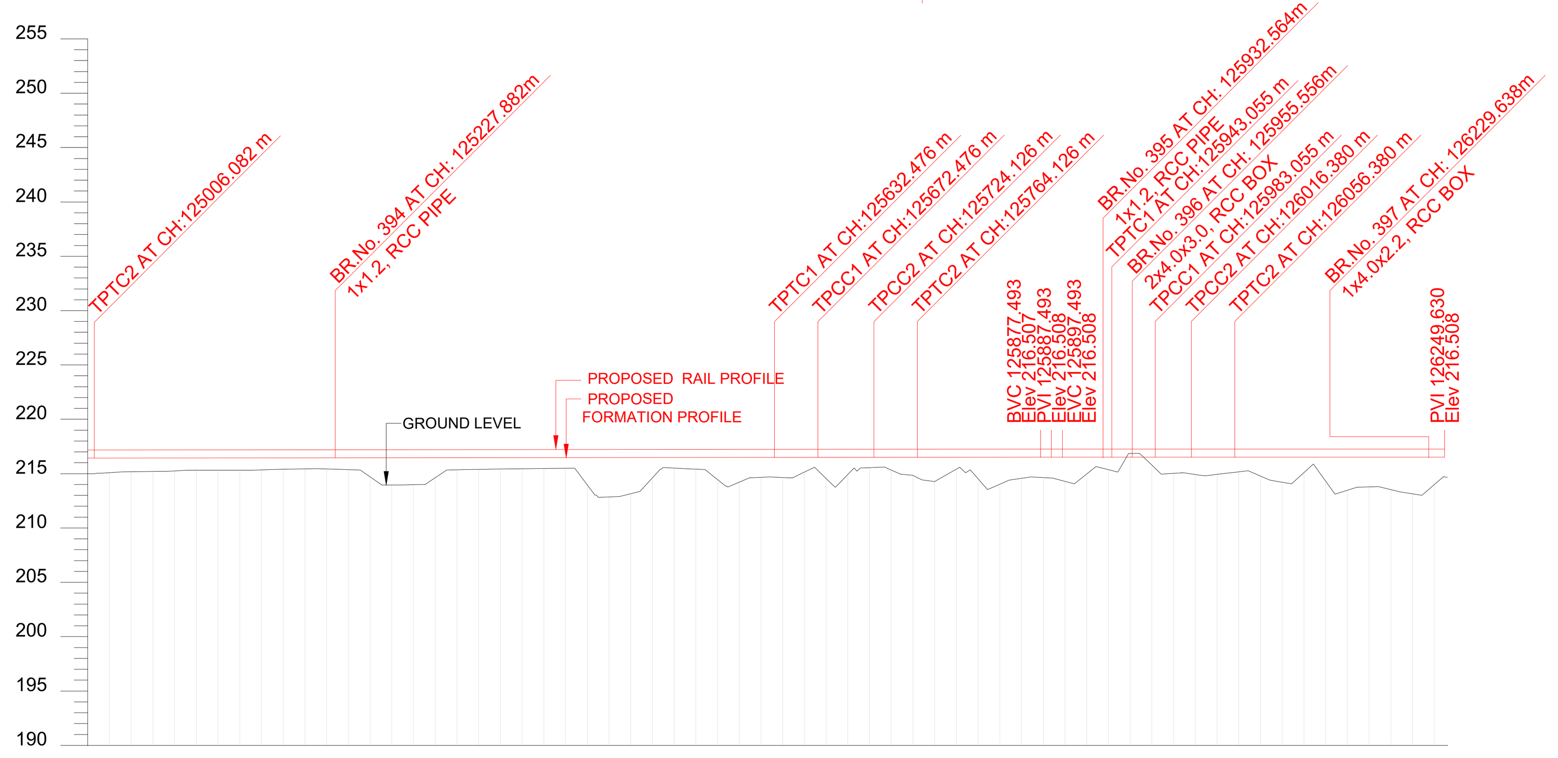

HORIZONTAL ALIGNMENT: TRL=40m; L=626.394m; TRL=40m; R=2500m; TRL=40m; L=178.929m; TRL=40m; R=2000m; TRL=40m; L=195.696m

VERTICAL ALIGNMENT: L=1828.495m, 1 IN 11079 R; L=20.000m, R=221587.34m; L=352.137m, LEVEL

CHAINAGES	GROUND LEVELS	PROPOSED FORMATION LEVEL	PROPOSED RAIL LEVEL	DEPTH OF CUTTING (-) / HIGHT OF BANKING (+)
125000.0	214.994	216.428	217.170	+1.434
125020.0	215.084	216.430	217.172	+1.346
125040.0	215.179	216.432	217.174	+1.253
125060.0	215.197	216.433	217.175	+1.236
125080.0	215.253	216.435	217.177	+1.182
125100.0	215.314	216.437	217.179	+1.123
125120.0	215.311	216.439	217.181	+1.128
125140.0	215.308	216.441	217.183	+1.133
125160.0	215.342	216.442	217.184	+1.100
125180.0	215.399	216.444	217.186	+1.045
125200.0	215.445	216.446	217.188	+1.001
125220.0	215.438	216.448	217.190	+1.010
125240.0	215.374	216.450	217.192	+1.076
125260.0	214.712	216.451	217.193	+1.739
125280.0	213.964	216.453	217.195	+2.489
125300.0	213.985	216.455	217.197	+2.470
125320.0	214.625	216.457	217.199	+1.832
125340.0	215.356	216.459	217.201	+1.103
125360.0	215.391	216.460	217.202	+1.069
125380.0	215.419	216.462	217.204	+1.043
125400.0	215.447	216.464	217.206	+1.017
125420.0	215.470	216.466	217.208	+0.996
125440.0	215.488	216.468	217.210	+0.980
125460.0	213.952	216.470	217.212	+2.518
125480.0	212.862	216.471	217.213	+3.609
125500.0	213.151	216.473	217.215	+3.322
125520.0	214.610	216.475	217.217	+1.865
125540.0	215.512	216.477	217.219	+0.965
125560.0	215.419	216.479	217.221	+1.060
125580.0	214.452	216.480	217.222	+2.028
125600.0	214.218	216.482	217.224	+2.264
125620.0	214.657	216.484	217.226	+1.827
125640.0	214.640	216.486	217.228	+1.846
125660.0	215.134	216.488	217.230	+1.354
125680.0	214.548	216.489	217.231	+1.941
125700.0	214.919	216.491	217.233	+1.572
125720.0	215.550	216.493	217.235	+0.943
125740.0	215.330	216.495	217.237	+1.165
125760.0	214.844	216.497	217.239	+1.653
125780.0	214.280	216.498	217.240	+2.218
125800.0	215.422	216.500	217.242	+1.078
125820.0	214.512	216.502	217.244	+1.990
125840.0	214.019	216.504	217.246	+2.485
125860.0	214.575	216.506	217.248	+1.931
125880.0	214.633	216.507	217.249	+1.874
125900.0	214.291	216.508	217.250	+2.217
125920.0	214.966	216.508	217.250	+1.542
125940.0	215.360	216.508	217.250	+1.148
125960.0	216.866	216.508	217.250	-0.358
125980.0	215.781	216.508	217.250	+0.727
126000.0	215.031	216.508	217.250	+1.477
126020.0	214.924	216.508	217.250	+1.584
126040.0	214.932	216.508	217.250	+1.576
126060.0	215.169	216.508	217.250	+1.339
126080.0	214.774	216.508	217.250	+1.734
126100.0	214.209	216.508	217.250	+2.299
126120.0	215.097	216.508	217.250	+1.411
126140.0	214.311	216.508	217.250	+2.197
126160.0	213.474	216.508	217.250	+3.034
126180.0	213.778	216.508	217.250	+2.730
126200.0	213.533	216.508	217.250	+2.975
126220.0	213.147	216.508	217.250	+3.361
126240.0	213.980	216.508	217.250	+2.528
126252.1	214.650			

LONGITUDINAL PROFILE
HORIZONTAL-1:5000, VERTICAL-1:500

LEGEND:

EXISTING RAILWAY TRACK	
PROPOSED UP & DN LINE	
DISMANTLING WORKS	
PROPOSED DIVERSIONS	
EXISTING ROAD	
PRO.HORC BOUNDARY	
EXPRESSWAY BOUNDARY	
HT LINE	
ELECTRICAL LINE(LT)	
STREAM / CANAL / DRAIN	
WELL	
POND	
PRO.TOE LINE	

NOTE:-
1. ALL DIMENSIONS ARE IN METRE UNLESS OTHERWISE STATED
2. ALL THE LEVELS ARE WITH RESPECT TO MEAN SEA LEVEL.
3. TRACK CETRE BETWEEN MAIN LINES OF HORC HAS BEEN KEPT AS MIN 5.30m
4. PUBLIC UTILITIES HT/LT LINES OFC CABLES WATER /SEWER LINES ETC INTERFERING WITH DFC TRACKS SHALL BE RELOCATED.
5. ARRANGEMENT & SIZE OF THE BRIDGE SHOWN IN THE DRAWING IS TENTATIVE AND MAY CHANGE AS PER THE APPROVED GAD.
6. VERTICAL CLEARANCE FROM LOWEST CONDUCTOR OF HT POWER LINE TO PROPOSED RAIL LEVEL ARE SHOWN

PROPOSED TRACK STRUCTURE (TO SUIT FOR 25T AXLE LOAD)

I. FOR RAIL CORRIDOR: 160KMPH Speed
* TRACK = 60KG RAILS
* SLEEPER DENSITY : PSC SLEEPERS = 1660 No.S PER KM
* BALLAST CUSHION : 350mm
* ALL TURNOUTS ARE 1 in 12 UNLESS OTHERWISE SPECIFIED.

ABBREVIATIONS:-
1. BVC - BEGIN OF VERTICAL CURVE
2. PVI - POINT OF VERTICAL INTERSECTION
2. EVC - END OF VERTICAL CURVE

LEGEND FOR PROFILE :
PROPOSED RAIL PROFILE
PROPOSED FORMATION PROFILE
GROUND PROFILE

GC/HORC		HRIDC	
NAME / DESIGNATION	SIGN	NAME / DESIGNATION	SIGN
CHAHATEY RAM PD		SHIV OM DWIVEDI CPM/HRIDC	
SUDHIR AGRAWAL DPD/CIVIL		ABHISHEK DAS DGM/C/NORTH	
KRISHAN CHAND SAINSI CRE/CIVIL			

PROJECT:
HARYANA ORBITAL RAIL CORRIDOR
CONNECTING PALWAL TO SONIPAT BYPASSING DELHI AREA BY LINKING ASAOTI-PATLI-SULTANPUR-ASAUDAH BY NEW ELECTRIFIED BG DOUBLE LINE

CLIENT:
HARYANA RAIL INFRASTRUCTURE DEVELOPMENT CORPORATION LIMITED.

GENERAL CONSULTANT:
GENERAL CONSULTANT FOR HARYANA ORBITAL RAIL CORRIDOR
RITES Limited in consortium with SMEC International Pty. Ltd.

GC DRG.NO.

TITLE :
PLAN & LONGITUDINAL SECTION
(125.0km TO 126.252km)

CONSULTANTS :
aarvee associates
architects engineers & consultants pvt.ltd.

AARVEE ASSOCIATES		
TANMAY (AM CAD) DRAWN	G.PRASAD (M) CHECKED	N.J. RAO (VP) APPROVED

DRG.NO. AA/2245/AL/DR/P&P/R3 | SHEET No.24 OF 24
SCALE : H = 1:5000 V = 1:500 | ISSUED Dt: 26.11.2019 | REV Dt: 06-08-2022

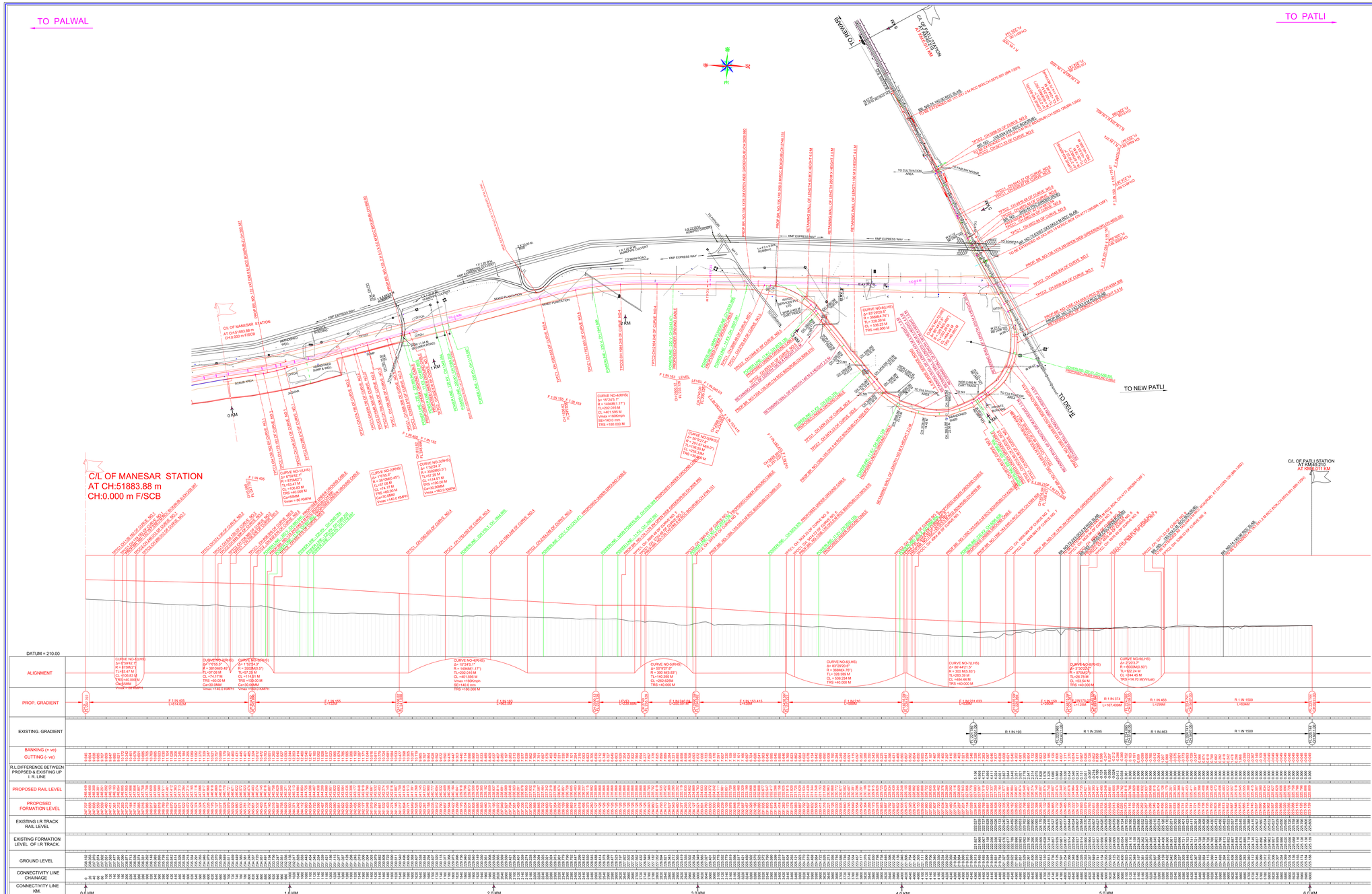

NOTES :-

1. EXISTING WORK SHOWN IN BLACK.
2. PROPOSED WORK SHOWN IN RED.
3. ALL DIMENSIONS ARE IN METER UNLESS OTHERWISE SPECIFIED.
4. CHAINAGE IS RECKONED 0.00 FROM C/L OF NEW PRITHLA STATION BUILDING .
5. RAIL LEVEL SHOULD BE 0.742m ABOVE FORMATION LEVEL FOR TRACK STRUCTURE 60KG NEW RAIL ON PSC SLEEPER (1660 KM) WITH 350mm BALLAST CUSHION.
6. RULLING GRADIENT IS 1 IN 150 OF THIS SECTION.(COMPENSATED)
7. VERTICAL CURVE WILL BE PROVIDED AS PER IRPWM PARA 419.
8. CROSS / LONGITUDINAL DRAINAGE ARRANGEMENT BET.TRACK SHOULD BE PROVIDED WHEREVER REQUIRED .
9. TROLLY REFUDGE IN BANK / CUTTING SHALL BE PROVIDED AS PER PROVISION OF IRPWM.
10. CRS. SANCTION WILL BE OBTAINED BEFORE EXECUTION OF WORK FALLING UNDER PARA 130(2) OF IRPWM.
11. STANDRADS OF LOADING (FOR PROP. LINE):- 32.5 T LOADING-2008 & HIGH RISE OHE.
12. TELEPHONE CABLE TO BE LAID FOR TELECOMUNICATION.

LEGEND

EXISTING CENTRE LINE	
PROPOSED CENTRE LINE	
EXISTING TPTC	
PROPOSED TPTC	
TBM	
KM-STONE	
RAILWAY BOUNDARY	
EXISTING BRIDGE	
PROPOSED BRIDGE	
NALA,CANAL,DRAIN	
PERMANENT STRUCTURE	
TEMPORARY STRUCTURE	
PROPOSED GATE LODGE	
LAND ACQUISITION	
ROAD	
POWER LINE WITH POLE	
PYLON	
EMBANKMENT / BUND	
ROCKY AREA	
COMPOUND WALL	
DITCH / QUARRY	
BARBED WIRE FENCING	
GROUND LEVEL	

NORTHERN RAILWAY	
DRM-DLI	
ADRM-INFRA-DLI	
SRDEN-CO-DLI	
SRDOM- DLI	
SRDSTE-DLI	
SRDEE-TRD-DLI	
SRDEN-S-DLI	
ADEN-DEE	
SSE-PWAY-GGN	
SSE-W-GGN	

HRIDC	SIGNATURE

GC/HORC	SIGNATURE

HARYANA RAIL INFRASTRUCTURE DEVELOPMENT CORPORATION

PROJECT: HARYANA ORBITAL RAIL CORRIDOR

DESIGNED: GAUGE 1676 mm. LENGTH: 6 KM
YEAR OF SURVEY- – – – – – – – – – – – 2020 – – –
STANDARD OF CONSTUCTION – – – – – – GROUP–A – –

DRAWING: DETAILED PLAN AND LONGITUDINAL SECTION
FROM CHAINAGE 0 TO CHAINAGE 5720 M (CONNECTIVITY LINE)

SCALE: HORIZONTAL 1: 5000 VERTICAL 1:500
0 50 100 150 200 METRES
0 5 10 15 20 METRES

LAYOUT DESIGN: DRG.NO.:HRIDC/PS-LS-2

S.M. CONSULTANTS
An ISO 9001 Company
Bhubaneswar | Delhi | Bangalore | Hyderabad | South Andaman
Web : www.smconsultants.in Mail : support@smconsultants.in

A R.E.MEHTA PROJECT CONCEPT

INITIATED: ITEHARE ISSUED: 01FEB21 CHECKED: 01FEB21 APPROVED: DATE / SIGNATURE

RELEASED FOR: PRELIMINARY FOR APPROVAL / TENDER / CONSTRUCTION

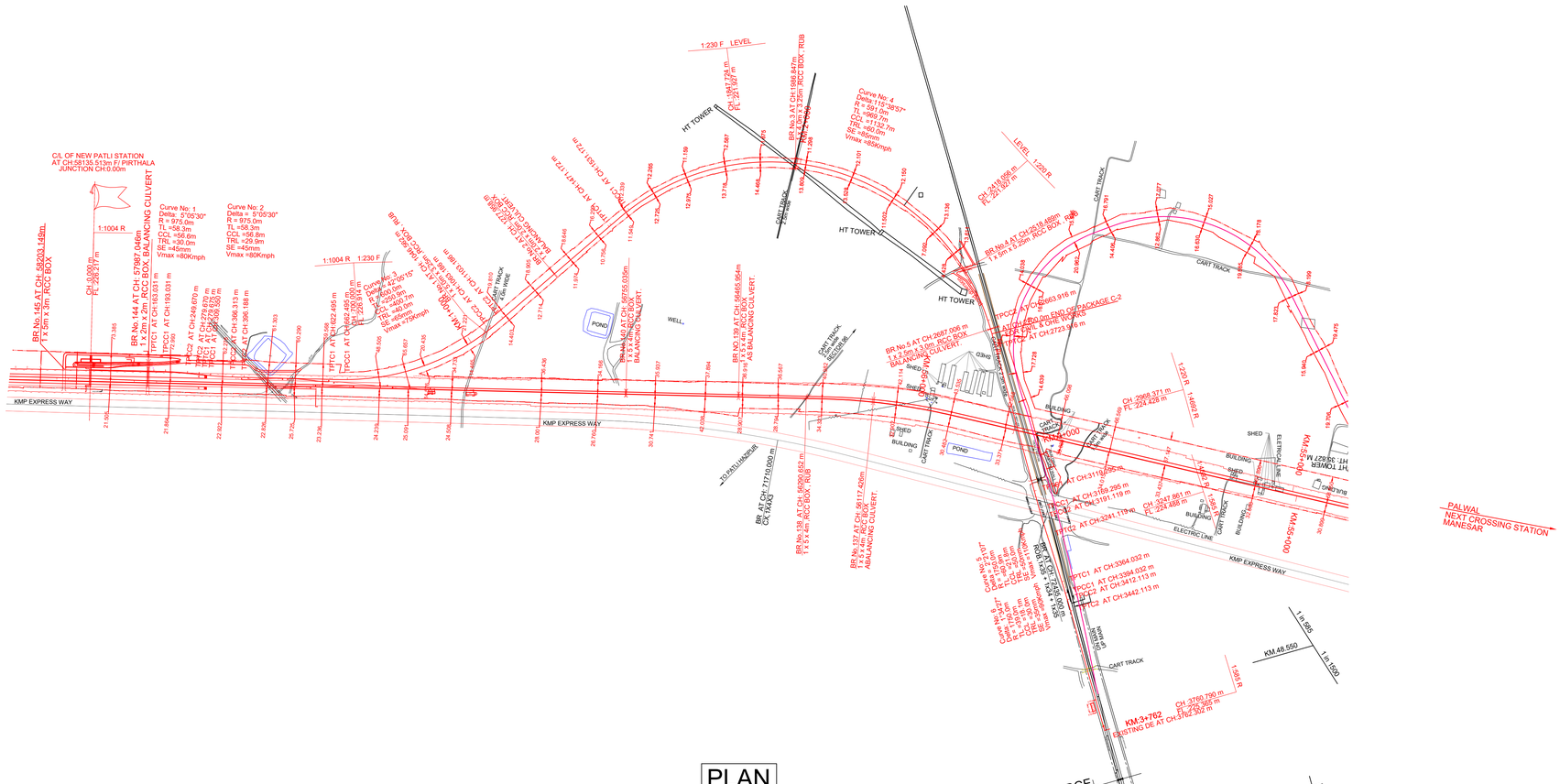

PLAN
1:5000

LONGITUDINAL PROFILE
HORIZONTAL:1 IN 5000, VERTICAL:1 IN 500

HORIZONTAL ALIGNMENT: L=163.031m | TRL =50m R =975m | TRL =50m R =975m | TRL =45m L=226.307m | TRL =45m R =600m | TRL =45m L=367.987m | TRL =60m R =591m | TRL =60m L=395.379m | TRL =50m R =1750m | TRL =50m L=122.913m | TRL =50m R =1750m | TRL =50m L=320.189m

VERTICAL ALIGNMENT: L=689.318m 1:1004 R | L=271.363m R=4000.02m | L=1127.043m 1:230 F | L=20.000m R=-4602.30m | L=550.332m LEVEL | L=20.000m R=-4602.04m | L=630.314m 1:220 R | L=20.000m R=4616.52m | L=258.491m 1:1692 R | L=20.000m R=-1000.21m | L=502.928m 1:585 R

CHAINAGES	GROUND LEVELS	PROPOSED FORMATION LEVEL	PROPOSED RAIL LEVEL	HIGHT OF BANKING (+) / DEPTH OF CUTTING (-)
0.0	216.545	226.217	226.959	+10.172
20.0	216.542	226.217	226.959	+10.174
40.0	216.023	226.217	226.959	+10.254
60.0	216.088	226.217	226.959	+10.199
80.0	216.081	226.317	227.059	+10.256
100.0	216.097	226.317	227.059	+10.241
120.0	216.141	226.317	227.059	+10.215
140.0	216.165	226.336	227.078	+10.191
160.0	216.218	226.336	227.078	+10.200
180.0	216.416	226.416	227.158	+10.099
200.0	216.471	226.416	227.158	+9.996
220.0	216.477	226.436	227.178	+9.959
240.0	216.402	226.516	227.258	+10.114
260.0	216.456	226.516	227.258	+10.058
280.0	216.407	226.596	227.298	+10.149
300.0	216.349	226.615	227.317	+10.226
320.0	216.196	226.615	227.317	+10.377
340.0	216.156	226.615	227.317	+10.459
360.0	216.081	226.695	227.397	+10.574
380.0	216.048	226.695	227.417	+10.029
400.0	216.045	226.715	227.437	+10.165
420.0	216.044	226.715	227.437	+10.151
440.0	216.042	226.735	227.457	+10.187
460.0	216.041	226.735	227.457	+10.167
480.0	216.039	226.755	227.477	+10.187
500.0	216.038	226.775	227.497	+10.187
520.0	216.036	226.775	227.517	+10.051
540.0	216.035	226.795	227.537	+10.072
560.0	216.034	226.814	227.556	+10.099
580.0	216.033	226.834	227.576	+10.124
600.0	216.031	226.854	227.596	+10.153
620.0	216.030	226.874	227.616	+10.064
640.0	216.029	226.894	227.636	+10.029
660.0	216.028	226.914	227.656	+9.994
680.0	216.027	226.914	227.656	+9.977
700.0	216.026	226.934	227.676	+9.960
720.0	216.025	226.954	227.696

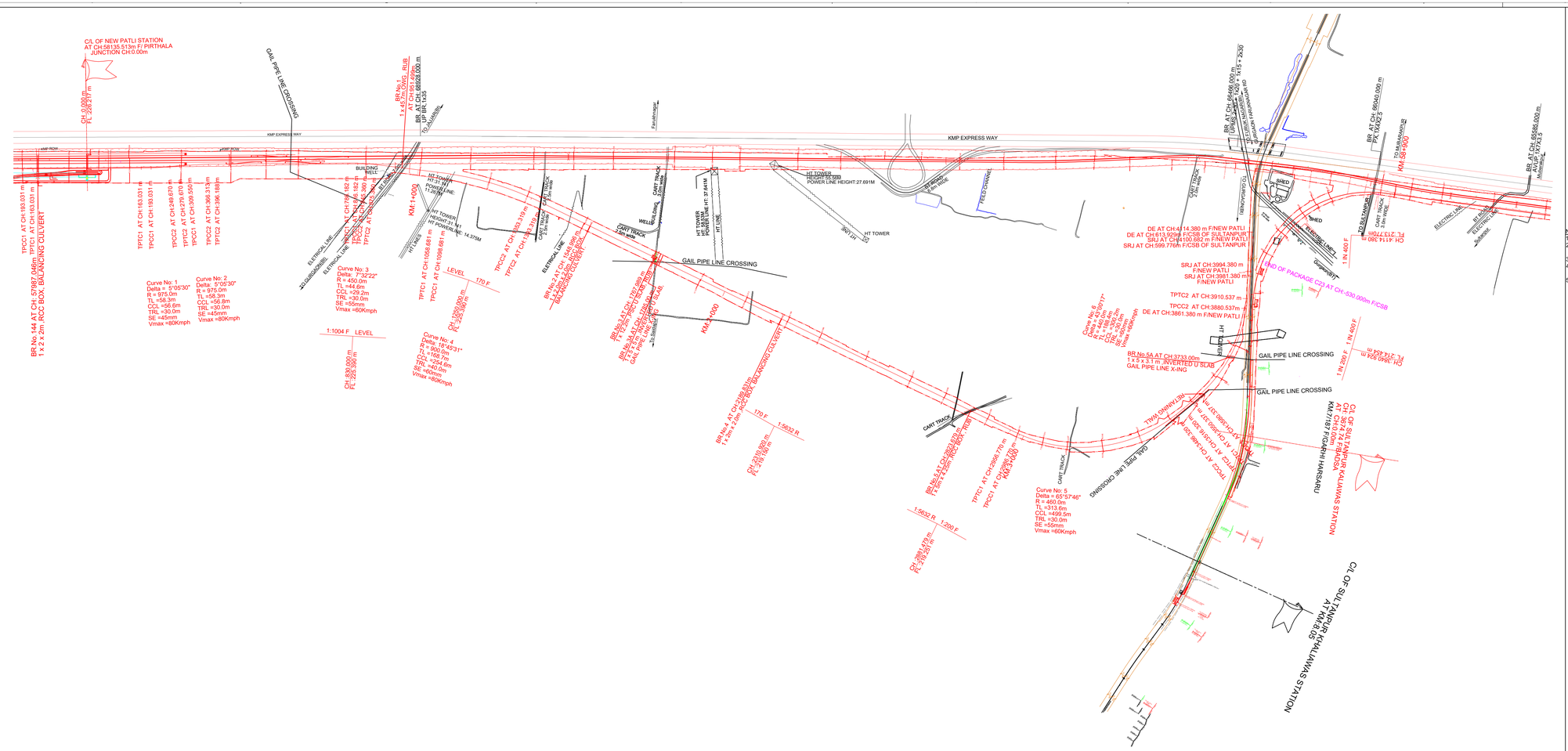

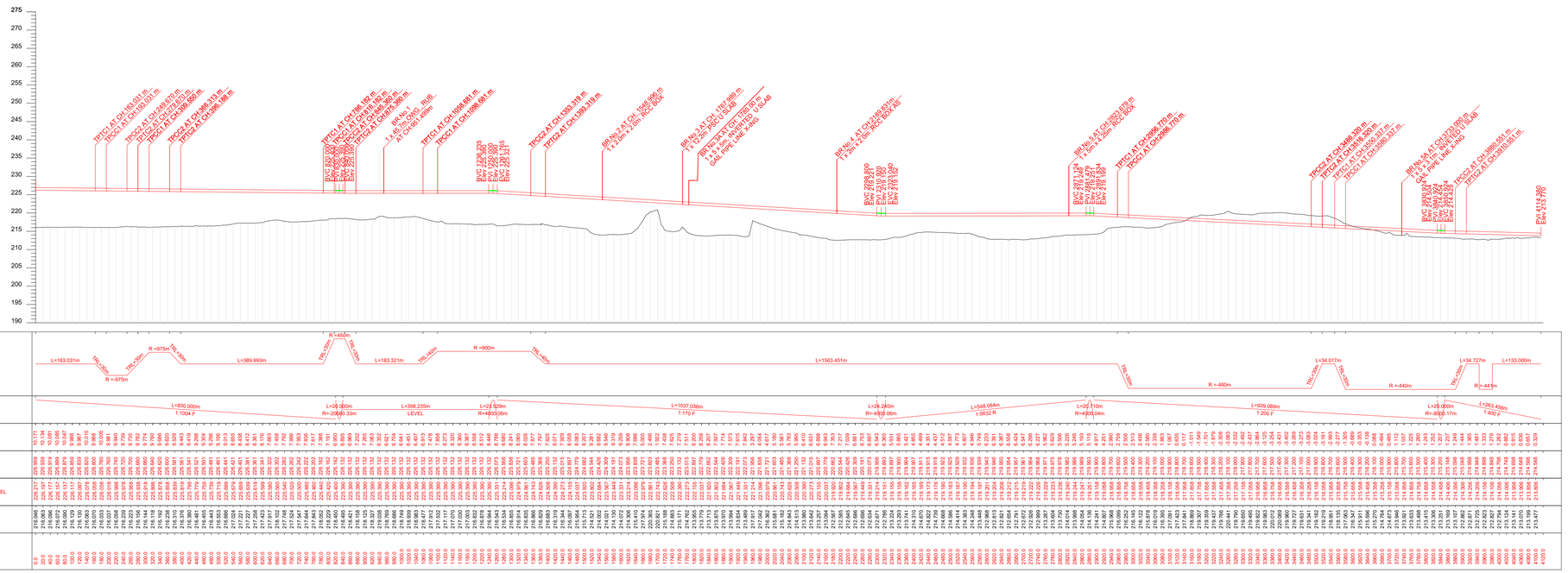

LEGEND:

- EXISTING RAILWAY TRACK
- PROPOSED UP & DN LINE
- DISMANTLING WORKS
- PROPOSED DIVERSIONS
- EXISTING ROAD
- PRO.HORC BOUNDARY
- KMP EXPRESSWAY
- KMP EXPRESSWAY BOUNDARY
- EXISTING RAILWAY BOUNDARY
- HT LINE
- ELECTRICAL LINE(LT)
- STREAM / CANAL / DRAIN
- WELL
- POND

NOTE:-

1. ALL DIMENSIONS ARE IN METER UNLESS OTHERWISE STATED
2. CH:0.00 FOR CONNECTIVITY LINE IS RECKONED FROM NEW PATLI STATION
3. ALL THE LEVELS ARE WITH RESPECT TO MEAN SEA LEVEL.
4. TRACK CENTER BETWEEN MAIN LINES OF HORC HAS BEEN KEPT AS MIN 5.30m
5. ARRANGEMENT & SIZE OF THE BRIDGE SHOWN IN THE DRAWING IS TENTATIVE AND MAY CHANGE AS PER THE APPROVED GAD.

PROPOSED TRACK STRUCTURE (TO SUIT FOR 25T AXLE LOAD

I. FOR RAIL CORRIDOR: 160KMPH Speed
* TRACK = 60KG RAILS
* SLEEPER DENSITY : PSC SLEEPERS = 1660 No.S PER KM
* BALLAST CUSHION : 350mm
* ALL TURNOUTS ARE 1 in 12 UNLESS OTHERWISE SPECIFIED.

ABBREVIATIONS:-

1. BVC - BEGIN OF VERTICAL CURVE
2. PVI - POINT OF VERTICAL INTERSECTION
2. EVC - END OF VERTICAL CURVE

LEGEND FOR PROFILE :

- EXISTING RAIL PROFILE
- PROPOSED FORMATION PROFILE
- GROUND PROFILE

GC/HORC	
NAME / DESIGNATION	SIGN
CHAHATEY RAM *PD*	
SUDHIR AGRAWAL *DPD/CIVIL*	
KRISHAN CHAND SAINSI *CRE/CIVIL*	

HRIDC	
NAME / DESIGNATION	SIGN
R. R. KUMAR *GM/ IP&P*	
UMA. M. RAO *DGM/CIVIL*	

PROJECT:
HARYANA ORBITAL RAIL CORRIDOR
CONNECTING PALWAL TO SONIPAT BYPASSING DELHI AREA BY LINKING ADAOTI-PATLI-SULTANPUR-KAKAUNAV BY NEW ELECTRIFIED BG DOUBLE LINE

CLIENT:
HARYANA RAIL INFRASTRUCTURE DEVELOPMENT CORPORATION LIMITED.

GENERAL CONSULTANT:
GENERAL CONSULTANT FOR HARYANA ORBITAL RAIL CORRIDOR
RITES Limited in consortium with SMEC International Pty. Ltd.

TITLE : CONCEPTUAL PLAN & LONGITUDINAL SECTION CONNECTIVITY TOWARDS SULTANPUR

GC DRG.NO.	GC-HRIDC-C2-DRW-ALN-P&P-04001_A2
ISSUE Dt: 11.11.2022	REVISED Dt: 24.12.2022

CONSULTANTS :
aarvee associates
architects engineers & consultants pvt ltd.
Ravula Residency, Srinagar Colony Main Rd., Hyderabad-82, India
Tel: 91-40-23737630, Fax: 91-40-23736377
e-mail: railways@aarvee.net; web:www.aarvee.net

AARVEE ASSOCIATES

TANMAY (AM DWG) DRAWN	G PRASAD (M) CHECKED	N.J. RAO (VP) APPROVED

DRG.NO. AA/2245/AL/DR/P&P/REV-2	SHEET No. 1
SCALE : H= 1:500/V = 1:500	ISSUED Dt: 26.11.2019 REV Dt: 06-08-2022

CHAINAGES	GROUND LEVELS	PROPOSED FORMATION LEVEL	PROPOSED RAIL LEVEL	DEPTH OF CUTTING (-) HIGHT OF BANKING (+)	VERTICAL ALIGNMENT	HORIZONTAL ALIGNMENT
500.0						
520.0	212.212	216.309	217.051	+4.097		
540.0	212.336	216.292	217.034	+3.956		
560.0	212.693	216.276	217.018	+3.383		
580.0	212.805	216.259	217.001	+3.394		
600.0	212.911	216.242	216.984	+3.331		
620.0	212.883	216.226	216.968	+3.343		
640.0	212.848	216.209	216.951	+3.361		
660.0	212.803	216.179	216.921	+3.376		
680.0	212.725	216.073	216.815	+3.338		
700.0	212.764	215.953	216.695	+3.169		
720.0	212.781	215.833	216.575	+3.052		
740.0	212.810	215.713	216.455	+2.903		
760.0	212.820	215.593	216.335	+2.773		
780.0	212.774	215.474	216.216	+2.700		
800.0	212.779	215.354	216.096	+2.575		
820.0	212.739	215.234	215.976	+2.495		
840.0	212.697	215.114	215.856	+2.417		
860.0	212.646	214.994	215.736	+2.348		
880.0	212.579	214.874	215.616	+2.295		
900.0	212.580	214.755	215.497	+2.175		
920.0	212.548	214.636	215.378	+2.088		
940.0	212.502	214.582	215.324	+2.089		
960.0	212.439	214.627	215.369	+2.189		
980.0	212.381	214.737	215.479	+2.356		
1000.0	212.329	214.848	215.590	+2.520		
1020.0	212.303	214.959	215.701	+2.656		
1040.0	212.293	215.070	215.812	+2.777		
1060.0	212.330	215.182	215.924	+2.852		
1080.0	212.372	215.293	216.035	+2.921		
1100.0	212.446	215.404	216.146	+2.958		
1120.0	212.411	215.515	216.257	+3.104		
1140.0	209.826	215.626	216.368	+5.800		
1160.0	210.010	215.737	216.479	+5.727		
1180.0	210.173	215.848	216.590	+5.675		
1200.0	212.443	215.959	216.701	+3.516		
1220.0	212.295	216.070	216.812	+3.775		
1240.0	212.234	216.181	216.923	+3.947		
1260.0	212.213	216.258	217.000	+4.045		
1280.0	212.257	216.301	217.043	+4.044		
1300.0	212.144	216.343	217.085	+4.199		
1320.0	212.212	216.386	217.128	+4.174		
1340.0	212.246	216.428	217.170	+4.182		
1360.0	212.179	216.471	217.213	+4.292		
1380.0	212.176	216.514	217.256	+4.338		
1400.0	212.236	216.556	217.298	+4.320		
1420.0	212.276	216.599	217.341	+4.323		
1440.0	212.299	216.641	217.383	+4.342		
1460.0	212.333	216.684	217.426	+4.351		
1480.0	212.337	216.726	217.468	+4.389		
1500.0	212.350	216.769	217.511	+4.419		
1520.0	212.379	216.811	217.553	+4.432		
1540.0	212.337	216.854	217.596	+4.517		
1560.0	212.228	216.896	217.638	+4.668		
1580.0	212.125	216.939	217.681	+4.814		
1600.0	212.017	216.982	217.724	+4.965		
1620.0	211.937	217.024	217.766	+5.087		
1640.0	211.889	217.067	217.809	+5.178		
1660.0	211.869	217.109	217.851	+5.250		
1680.0	211.857	217.152	217.894	+5.295		
1700.0	211.820	217.194	217.936	+5.334		
1720.0	211.758	217.237	217.979	+5.479		
1740.0	211.749	217.279	218.021	+5.530		
1760.0	211.806	217.322	218.064	+5.516		
1780.0	211.810	217.364	218.106	+5.554		
1800.0	211.870	217.407	218.149	+5.537		
1820.0	211.926	217.449	218.191	+5.523		
1840.0	212.052	217.492	218.234	+5.440		
1860.0	212.059	217.535	218.277	+5.476		
1880.0	212.070	217.577	218.319	+5.507		
1900.0	212.004	217.620	218.362	+5.616		
1920.0	211.960	217.662	218.404	+5.702		
1940.0	211.876	217.705	218.447	+5.829		
1960.0	211.996	217.747	218.489	+5.751		
1980.0	212.220	217.790	218.532	+5.570		
2000.0	212.271	217.832	218.574	+5.561		
2020.0	212.239	217.875	218.617	+5.636		
2040.0	212.259	217.917	218.659	+5.658		
2060.0	212.207	217.921	218.663	+5.714		
2080.0	212.119	217.906	218.648	+5.787		
2100.0	212.092	217.891	218.633	+5.799		
2120.0	212.132	217.876	218.618	+5.744		
2140.0	212.164	217.862	218.604	+5.698		
2160.0	212.214	217.847	218.589	+5.633		
2180.0	212.240	217.832	218.574	+5.592		
2200.0	212.257	217.817	218.559	+5.560		
2220.0	212.273	217.802	218.544	+5.529		
2240.0	212.270	217.788	218.530	+5.519		
2260.0	212.402	217.773	218.515	+5.371		
2280.0	212.449	217.758	218.500	+5.309		
2300.0	212.520	217.743	218.485	+5.223		
2320.0	212.703	217.727	218.469	+5.024		
2340.0	212.880	217.619	218.361	+4.739		
2360.0	212.971	217.528	218.270	+4.557		
2380.0	213.396	217.437	218.179	+4.041		
2400.0	213.268	217.347	218.089	+4.079		
2420.0	213.272	217.256	217.998	+3.984		
2440.0	213.390	217.165	217.907	+3.775		
2460.0	213.555	217.075	217.817	+3.520		
2480.0	213.785	216.984	217.726	+3.199		
2500.0	213.990	216.893	217.635	+2.903		
2520.0	214.006	216.803	217.545	+2.797		
2540.0	214.001	216.712	217.454	+2.711		
2560.0	213.974	216.621	217.363	+2.647		
2580.0	213.783	216.530	217.272	+2.747		
2600.0	213.686	216.440	217.182	+2.754		
2620.0	213.266	216.349	217.091	+2.883		
2640.0	213.262	216.258	217.000	+2.996		
2660.0	212.899	216.168	216.910	+3.269		
2680.0	212.901	216.077	216.819	+3.176		
2700.0	212.890	215.986	216.728	+3.096		
2720.0	213.136	215.896	216.638	+2.760		
2740.0	213.477	215.805	216.547	+2.328		
2760.0	213.891	215.714	216.456	+1.823		
2780.0	214.073	215.624	216.366	+1.551		
2800.0	214.369	215.533	216.275	+1.164		
2820.0	214.453	215.442	216.184	+0.989		
2840.0	214.172	215.352	216.094	+1.180		
2860.0	213.425	215.261	216.003	+1.836		
2880.0	213.157	215.170	215.912	+2.013		
2900.0	213.164	215.080	215.822	+1.916		
2920.0	213.162	214.989	215.731	+1.827		
2940.0	213.059	214.898	215.640	+1.839		
2960.0	213.017	214.808	215.550	+1.791		
2980.0	213.584	214.717	215.459	+1.133		
3000.0	214.338	214.626	215.368	+0.288		
3020.0	214.260	214.536	215.278	+0.276		
3040.0	212.964	214.445	215.187	+1.481		
3060.0	213.148	214.354	215.096	+1.206		
3080.0	213.073	214.263	215.005	+1.190		
3100.0	212.616	214.173	214.915	+1.657		
3120.0	212.545	214.082	214.824	+1.537		
3140.0	212.546	214.016	214.758	+1.470		
3160.0	212.374	214.041	214.783	+1.667		
3180.0	212.802	214.091	214.833	+1.289		
3200.0	212.926	214.141	214.883	+1.035		
3220.0	213.061	214.191	214.933	+1.130		
3240.0	212.906	214.241	214.983	+1.335		
3260.0	213.133	214.291	215.033	+1.158		
3280.0	213.112	214.341	215.083	+1.229		
3300.0	213.232	214.391	215.133	+1.159		
3320.0	213.222	214.441	215.183	+1.219		
3340.0	213.294	214.491	215.233	+1.197		
3360.0	213.354	214.541	215.283	+1.187		
3380.0	213.390	214.591	215.333	+1.201		
3400.0	213.665	214.641	215.383	+0.976		
3420.0	213.492	214.691	215.433	+1.199		
3440.0	213.543	214.741	215.483	+1.198		
3460.0	213.769	214.791	215.533	+1.022		
3480.0	213.885	214.841	215.583	+0.956		
3500.0	214.136	214.891	215.633	+0.755		
3520.0	214.006	214.941	215.683	+0.935		
3540.0	215.059	214.991	215.733	+0.098		
3560.0	215.255	215.041	215.783	-0.214		
3580.0	215.062	215.091	215.833	+0.029		
3600.0	214.900	215.141	215.883	+0.241		
3620.0	215.195	215.191	215.933	-0.004		
3640.0	214.935	215.241	215.983	+0.306		
3660.0	215.682	215.291	216.033	-0.391		
3680.0	216.233	215.341	216.083	-0.892		
3700.0	216.254	215.391	216.133	-0.863		
3720.0	216.402	215.441	216.183	-0.961		
3740.0	216.319	215.491	216.233	-0.828		
3760.0	216.721	215.541	216.283	-1.180		
3780.0	217.113	215.591	216.333	-1.522		
3800.0	217.546	215.641	216.383	-1.905		
3820.0	217.557	215.691	216.433	-1.866		
3840.0	218.100	215.741	216.483	-2.359		
3860.0	218.333	215.791	216.533	-2.542		
3880.0	218.454	215.841	216.583	-2.613		
3900.0	218.589	215.891	216.633	-2.698		
3920.0	218.765	215.941	216.683	-2.824		
3940.0	218.866	215.991	216.733	-2.875		
3960.0	218.857	216.007	216.749	-2.850		
3980.0	219.041	215.961	216.703	-3.080		
4000.0	218.917	215.915	216.657	-3.002		
4020.0	219.575	215.869	216.611	-3.706		
4040.0	219.193	215.822	216.564	-3.371		
4060.0	218.691	215.776	216.518	-2.915		
4080.0	218.695	215.730	216.472	-2.969		
4100.0	218.375	215.683	216.425	-2.692		
4120.0	218.170	215.637	216.379	-2.533		
4140.0	217.461	215.591	216.333	-1.870		
4160.0	217.087	215.544	216.286	-1.543		
4180.0	216.696	215.498	216.240	-1.198		
4200.0	217.293	215.452	216.194	-1.841		
4220.0						

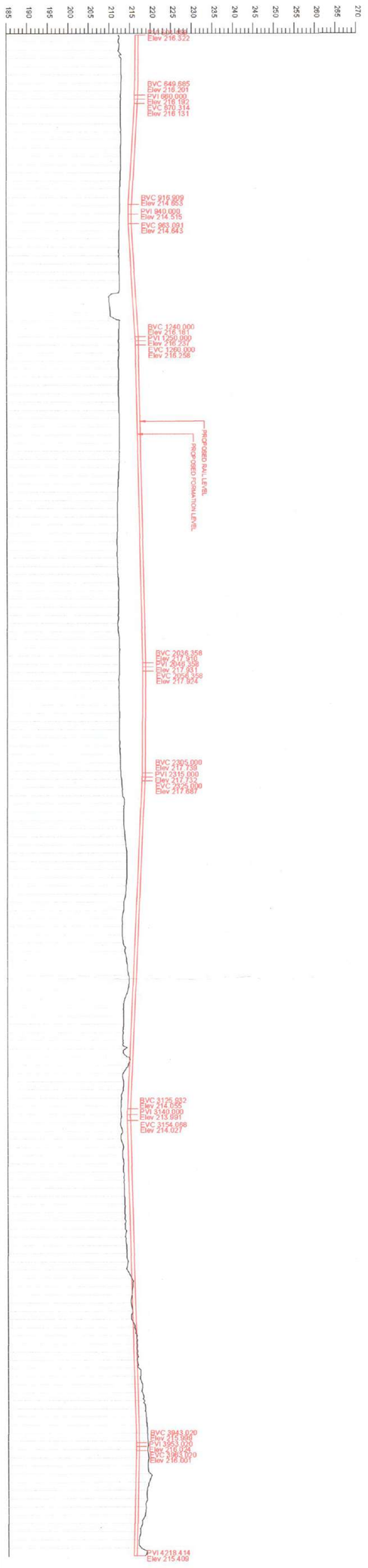
185 190 195 200 205 210 215 220 225 230 235 240 245 250 255 260 265 270
BVC 549.685
Elev 216.201
PVI 669.000
Elev 216.192
EVC 670.314
Elev 216.131
EVC 915.609
Elev 214.853
PVI 940.000
Elev 214.515
EVC 963.091
Elev 214.643
BVC 1240.000
Elev 216.181
PVI 1250.000
Elev 216.237
EVC 1260.000
Elev 216.258
PROPOSED RAIL LEVEL
PROPOSED FORMATION LEVEL
BVC 2036.358
Elev 217.910
PVI 2048.358
Elev 217.851
EVC 2054.358
Elev 217.924
BVC 2305.000
Elev 217.738
PVI 2315.000
Elev 217.732
EVC 2325.000
Elev 217.887
BVC 3125.032
Elev 214.055
PVI 3140.000
Elev 213.891
EVC 3154.068
Elev 214.027
BVC 3943.020
Elev 215.966
PVI 3953.020
Elev 215.952
EVC 3963.020
Elev 216.001
PVI 4218.414
Elev 215.409
HORIZONTAL ALIGNMENT
TRK.=100m
R.=3000m
TRK.=90m
R.=350m
TRK.=100m
R.=687m
TRK.=90m
R.=441m
L=293.47m
L=184.88m
L=446.88m
L=441.98m
L=274.00m
L=274.00m
L=274.00m
L=274.00m
L=278.59m
L=223.50m
L=176.66m
L=125.00m
L=469.64m
L=469.64m
L=469.64

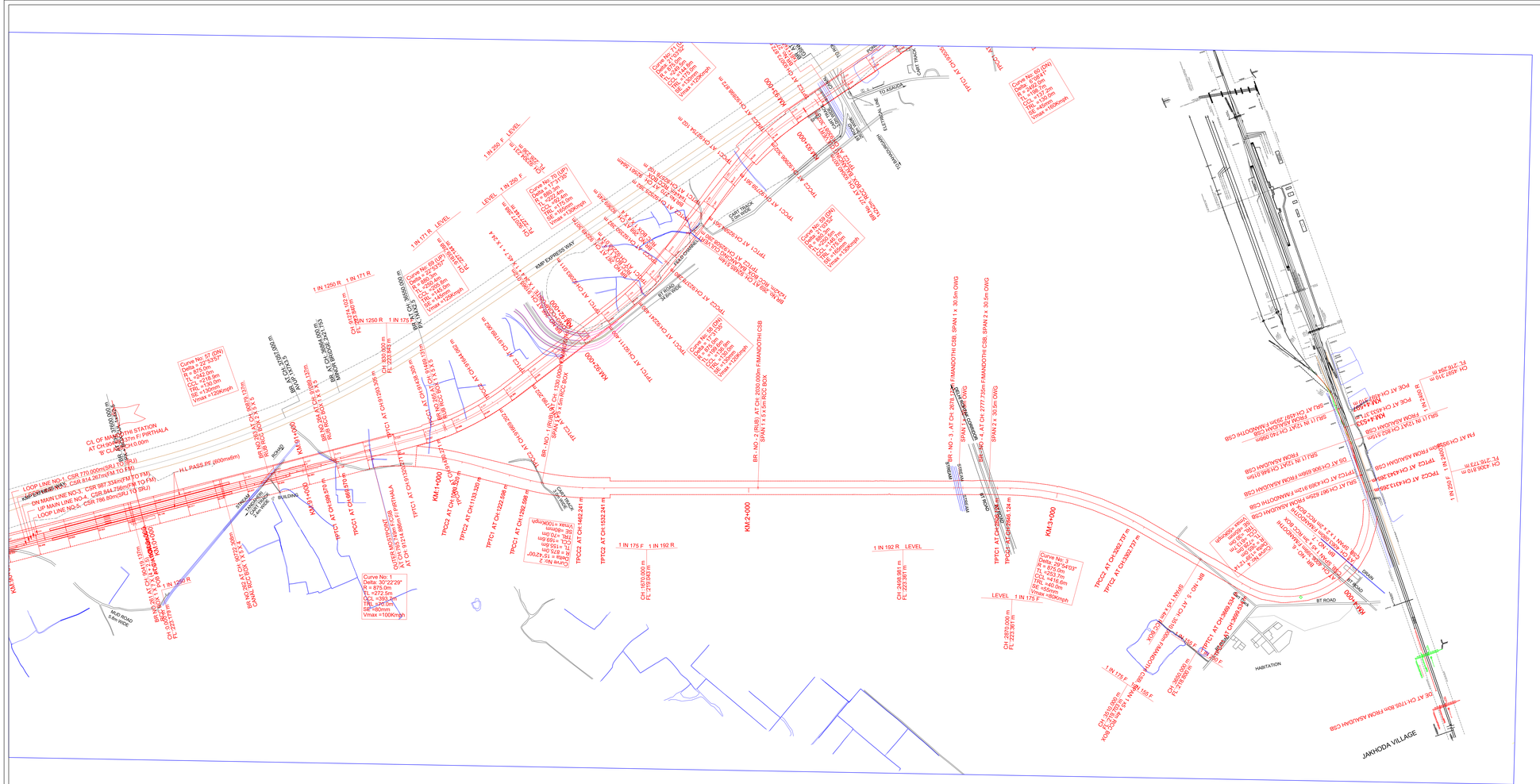
LEGEND
EXISTING RAILWAY TRACK
PROPOSED UP & DN LINE
DISMANTLING WORKS
PROPOSED DIVERSIONS
EXISTING ROAD
PRO.HORC BOUNDARY
EXPRESSWAY BOUNDARY
HT LINE
ELECTRICAL LINE(LT)
STREAM / CANAL / DRAIN
WELL
POND
PRO.TOE LINE
NOTE:-
1. ALL DIMENSIONS ARE IN METRE UNLESS OTHERWISE STATED
2. ALL THE LEVELS ARE WITH RESPECT TO MEAN SEA LEVEL
3. TRACK CETRE BETWEEN MAIN LINES OF HORC HAS BEEN KEPT AS MIN 5.30m
4. PUBLIC UTILITIES HT/LT LINES OFC CABLES WATER /SEWER LINES ETC INTERFERING WITH DFC TRACKS SHALL BE RELOCATED
5. ARRANGEMENT & SIZE OF THE BRIDGE SHOWN IN THE DRAWING IS TENTATIVE AND MAY CHANGE AS PER THE APPROVED GAD
6. VERTICAL CLEARANCE FROM LOWEST CONDUCTOR OF HT POWER LINE TO PROPOSED RAIL LEVEL ARE SHOWN
PROPOSED TRACK STRUCTURE (TO SUIT FOR 25T AXLE LOAD)
I. FOR RAIL CORRIDOR: 160KMPH Speed
* TRACK = 60KG RAILS
* SLEEPER DENSITY : PSC SLEEPERS = 1660 No.S PER KM
* BALLAST CUSHION : 350mm
* ALL TURNOUTS ARE 1 in 12 UNLESS OTHERWISE SPECIFIED.
ABBREVIATIONS:-
1. BVC - BEGIN OF VERTICAL CURVE
2. PVI - POINT OF VERTICAL INTERSECTION
2. EVC - END OF VERTICAL CURVE
LEGEND FOR PROFILE :
PROPOSED RAIL PROFILE
PROPOSED FORMATION PROFILE
GROUND PROFILE
KM 0+000
KM 1+000
KM 2+000
KM 3+000
KM 4+000
JAKHODA VILLAGE
HABITATION
BT ROAD
DRAIN
STREAM
TO AKALKA
TO SHAHABAD
KMP EXPRESS WAY
BR_NO.-1 (ROB) AT CH: 1000.000m FMANOOTHI CSB SPAN 1 x 3 x 5m RCC BOX
BR_NO.-2 (ROB) AT CH: 2830.000m FMANOOTHI CSB SPAN 1 x 3 x 5m RCC BOX
BR_NO.-3 AT CH: 2879.772m FMANOOTH CSB, SPAN 1 x 30.5m OWG
BR_NO.-4 AT CH: 2777.735m FMANOOTH CSB, SPAN 2 x 30.5m OWG
BR_NO.-5 AT CH: 3610.068m FMANOOTHI CSB, SPAN 1 x 3 x 4.5m RCC BOX
BR_NO.-6 AT CH: 4008.198m FMANOOTHI CSB, SPAN 1 x 3 x 3m RCC BOX
BR_NO.-7 AT CH: 4360.000m FMANOOTHI CSB, SPAN 1 x 2 x 3m RCC BOX
Curve No. 1
Delta: 30°22'29"
R = 875.0m
TL =272.5m
CCL =383.4m
TEL =240.0m
SE =60mm
Vmax =100Kmph
Curve No. 2
Delta: 29°41'03"
R = 875.0m
TL =233.7m
CCL =416.6m
TEL =240.0m
SE = 54mm
Vmax =105Kmph
Curve No. 3
Delta: 29°41'03"
R = 875.0m
TL =233.7m
CCL =416.6m
TEL =240.0m
SE = 54mm
Vmax =105Kmph
Curve No. 50 (DN)
Delta: 8°05'06"
R = 1146.0m
TL =81.0m
CCL =161.8m
TEL =160.0m
SE =90mm
Vmax =130Kmph
Curve No. 51 (DN)
Delta: 2°42'53"
R = 874.0m
TL =20.7m
CCL =41.5m
TEL =40.0m
SE =15mm
Vmax =120Kmph
Curve No. 52 (UP)
Delta: 8°05'06"
R = 1146.0m
TL =81.0m
CCL =161.8m
TEL =160.0m
SE =90mm
Vmax =130Kmph
Curve No. 53 (UP)
Delta: 2°42'53"
R = 874.0m
TL =20.7m
CCL =41.5m
TEL =40.0m
SE =15mm
Vmax =120Kmph
Curve No. 54 (DN)
Delta: 8°05'06"
R = 1146.0m
TL =81.0m
CCL =161.8m
TEL =160.0m
SE =90mm
Vmax =130Kmph
Curve No. 55 (DN)
Delta: 2°42'53"
R = 874.0m
TL =20.7m
CCL =41.5m
TEL =40.0m
SE =15mm
Vmax =120Kmph
Curve No. 60 (DN)
Delta: 8°05'06"
R = 1146.0m
TL =81.0m
CCL =161.8m
TEL =160.0m
SE =90mm
Vmax =130Kmph
Curve No. 61 (DN)
Delta: 2°42'53"
R = 874.0m
TL =20.7m
CCL =41.5m
TEL =40.0m
SE =15mm
Vmax =120Kmph
Curve No. 62 (UP)
Delta: 8°05'06"
R = 1146.0m
TL =81.0m
CCL =161.8m
TEL =160.0m
SE =90mm
Vmax =130Kmph
Curve No. 63 (UP)
Delta: 2°42'53"
R = 874.0m
TL =20.7m
CCL =41.5m
TEL =40.0m
SE =15mm
Vmax =120Kmph
Curve No. 70 (UP)
Delta: 8°05'06"
R = 1146.0m
TL =81.0m
CCL =161.8m
TEL =160.0m
SE =90mm
Vmax =130Kmph
Curve No. 71 (UP)
Delta: 2°42'53"
R = 874.0m
TL =20.7m
CCL =41.5m
TEL =40.0m
SE =15mm
Vmax =120Kmph
Curve No. 72 (UP)
Delta: 8°05'06"
R = 1146.0m
TL =81.0m
CCL =161.8m
TEL =160.0m
SE =90mm
Vmax =130Kmph
Curve No. 73 (UP)
Delta: 2°42'53"
R = 874.0m
TL =20.7m
CCL =41.5m
TEL =40.0m
SE =15mm
Vmax =120Kmph
Curve No. 74 (UP)
Delta: 8°05'06"
R = 1146.0m
TL =81.0m
CCL =161.8m
TEL =160.0m
SE =90mm
Vmax =130Kmph
Curve No. 75 (UP)
Delta: 2°42'53"
R = 874.0m
TL =20.7m
CCL =41.5m
TEL =40.0m
SE =15mm
Vmax =120Kmph
Curve No. 76 (UP)
Delta: 8°05'06"
R = 1146.0m
TL =81.0m
CCL =161.8m
TEL =160.0m
SE =90mm
Vmax =130Kmph
Curve No. 77 (UP)
Delta: 2°42'53"
R = 874.0m
TL =20.7m
CCL =41.5m
TEL =40.0m
SE =15mm
Vmax =120Kmph
Curve No. 78 (UP)
Delta: 8°05'06"
R = 1146.0m
TL =81.0m
CCL =161.8m
TEL =160.0m
SE =90mm
Vmax =130Kmph
Curve No. 79 (UP)
Delta: 2°42'53"
R = 874.0m
TL =20.7m
CCL =41.5m
TEL =40.0m
SE =15mm
Vmax =120Kmph
Curve No. 80 (UP)
Delta: 8°05'06"
R = 1146.0m
TL =81.0m
CCL =161.8m
TEL =160.0m
SE =90mm
Vmax =130Kmph
Curve No. 81 (UP)
Delta: 2°42'53"
R = 874.0m
TL =20.7m
CCL =41.5m
TEL =40.0m
SE =15mm
Vmax =120Kmph
Curve No. 82 (UP)
Delta: 8°05'06"
R = 1146.0m
TL =81.0m
CCL =161.8m
TEL =160.0m
SE =90mm
Vmax =130Kmph
Curve No. 83 (UP)
Delta: 2°42'53"
R = 874.0m
TL =20.7m
CCL =41.5m
TEL =40.0m
SE =15mm
Vmax =120Kmph
Curve No. 84 (UP)
Delta: 8°05'06"
R = 1146.0m
TL =81.0m
CCL =161.8m
TEL =160.0m
SE =90mm
Vmax =130Kmph
Curve No. 85 (UP)
Delta: 2°42'53"
R = 874.0m
TL =20.7m
CCL =41.5m
TEL =40.0m
SE =15mm
Vmax =120Kmph
Curve No. 86 (UP)
Delta: 8°05'06"
R = 1146.0m
TL =81.0m
CCL =161.8m
TEL =160.0m
SE =90mm
Vmax =130Kmph
Curve No. 87 (UP)
Delta: 2°42'53"
R = 874.0m
TL =20.7m
CCL =41.5m
TEL =40.0m
SE =15mm
Vmax =120Kmph
Curve No. 88 (UP)
Delta: 8°05'06"
R = 1146.0m
TL =81.0m
CCL =161.8m
TEL =160.0m
SE =90mm
Vmax =130Kmph
Curve No. 89 (UP)
Delta: 2°42'53"
R = 874.0m
TL =20.7m
CCL =41.5m
TEL =40.0m
SE =15mm
Vmax =120Kmph
Curve No. 90 (UP)
Delta: 8°05'06"
R = 1146.0m
TL =81.0m
CCL =161.8m
TEL =160.0m
SE =90mm
Vmax =130Kmph
Curve No. 91 (UP)
Delta: 2°42'53"
R = 874.0m
TL =20.7m
CCL =41.5m
TEL =40.0m
SE =15mm
Vmax =120Kmph
Curve No. 92 (UP)
Delta: 8°05'06"
R = 1146.0m
TL =81.0m
CCL =161.8m
TEL =160.0m
SE =90mm
Vmax =130Kmph
Curve No. 93 (UP)
Delta: 2°42'53"
R = 874.0m
TL =20.7m
CCL =41.5m
TEL =40.0m
SE =15mm
Vmax =120Kmph
Curve No. 94 (UP)
Delta: 8°05'06"
R = 1146.0m
TL =81.0m
CCL =161.8m
TEL =160.0m
SE =90mm
Vmax =130Kmph
Curve No. 95 (UP)
Delta: 2°42'53"
R = 874.0m
TL =20.7m
CCL =41.5m
TEL =40.0m
SE =15mm
Vmax =120Kmph
Curve No. 96 (UP)
Delta: 8°05'06"
R = 1146.0m
TL =81.0m
CCL =161.8m
TEL =160.0m
SE =90mm
Vmax =130Kmph
Curve No. 97 (UP)
Delta: 2°42'53"
R = 874.0m
TL =20.7m
CCL =41.5m
TEL =40.0m
SE =15mm
Vmax =120Kmph
Curve No. 98 (UP)
Delta: 8°05'06"
R = 1146.0m
TL =81.0m
CCL =161.8m
TEL =160.0m
SE =90mm
Vmax =130Kmph
Curve No. 99 (UP)
Delta: 2°42'53"
R = 874.0m
TL =20.7m
CCL =41.5m
TEL =40.0m
SE =15mm
Vmax =120Kmph
Curve No. 100 (UP)
Delta: 8°05'06"
R = 1146.0m
TL =81.0m
CCL =161.8m
TEL =160.0m
SE =90mm
Vmax =130Kmph
Curve No. 101 (UP)
Delta: 2°42'53"
R = 874.0m
TL =20.7m
CCL =41.5m
TEL =40.0m
SE =15mm
Vmax =120Kmph
Curve No. 102 (UP)
Delta: 8°05'06"
R = 1146.0m
TL =81.0m
CCL =161.8m
TEL =160.0m
SE =90mm
Vmax =130Kmph
Curve No. 103 (UP)
Delta: 2°42'53"
R = 874.0m
TL =20.7m
CCL =41.5m
TEL =40.0m
SE =15mm
Vmax =120Kmph
Curve No. 104 (UP)
Delta: 8°05'06"
R = 1146.0m
TL =81.0m
CCL =161.8m
TEL =160.0m
SE =90mm
Vmax =130Kmph
Curve No. 105 (UP)
Delta: 2°42'53"
R = 874.0m
TL =20.7m
CCL =41.5m
TEL =40.0m
SE =15mm
Vmax =120Kmph
Curve No. 106 (UP)
Delta: 8°05'06"
R = 1146.0m
TL =81.0m
CCL =161.8m
TEL =160.0m
SE =90mm
Vmax =130Kmph
Curve No. 107 (UP)
Delta: 2°42'53"
R = 874.0m
TL =20.7m
CCL =41.5m
TEL =40.0m
SE =15mm
Vmax =120Kmph
Curve No. 108 (UP)
Delta: 8°05'06"
R = 1146.0m
TL =81.0m
CCL =161.8m
TEL =160.0m
SE =90mm
Vmax =130Kmph
Curve No. 109 (UP)
Delta: 2°42'53"
R = 874.0m
TL =20.7m
CCL =41.5m
TEL =40.0m
SE =15mm
Vmax =120Kmph
Curve No. 110 (UP)
Delta: 8°05'06"
R = 1146.0m
TL =81.0m
CCL =161.8m
TEL =160.0m
SE =90mm
Vmax =130Kmph
Curve No. 111 (UP)
Delta: 2°42'53"
R = 874.0m
TL =20.7m
CCL =41.5m
TEL =40.0m
SE =15mm
Vmax =120Kmph
Curve No. 112 (UP)
Delta: 8°05'06"
R = 1146.0m
TL =81.0m
CCL =161.8m
TEL =160.0m
SE =90mm
Vmax =130Kmph
Curve No. 113 (UP)
Delta: 2°42'53"
R = 874.0m
TL =20.7m
CCL =41.5m
TEL =40.0m
SE =15mm
Vmax =120Kmph
Curve No. 114 (UP)
Delta: 8°05'06"
R = 1146.0m
TL =81.0m
CCL =161.8m
TEL =160.0m
SE =90mm
Vmax =130Kmph
Curve No. 115 (UP)
Delta: 2°42'53"
R = 874.0m
TL =20.7m
CCL =41.5m
TEL =40.0m
SE =15mm
Vmax =120Kmph
Curve No. 116 (UP)
Delta: 8°05'06"
R = 1146.0m
TL =81.0m
CCL =161.8m
TEL =160.0m
SE =90mm
Vmax =130Kmph
Curve No. 117 (UP)
Delta: 2°42'53"
R = 874.0m
TL =20.7m
CCL =41.5m
TEL =40.0m
SE =15mm
Vmax =120Kmph
Curve No. 118 (UP)
Delta: 8°05'06"
R = 1146.0m
TL =81.0m
CCL =161.8m
TEL =160.0m
SE =90mm
Vmax =130Kmph
Curve No. 119 (UP)
Delta: 2°42'53"
R = 874.0m
TL =20.7m
CCL =41.5m
TEL =40.0m
SE =15mm
Vmax =120Kmph
Curve No. 120 (UP)
Delta: 8°05'06"
R = 1146.0m
TL =81.0m
CCL =161.8m
TEL =160.0m
SE =90mm
Vmax =130Kmph
Curve No. 121 (UP)
Delta: 2°42'53"
R = 874.0m
TL =20.7m
CCL =41.5m
TEL =40.0m
SE =15mm
Vmax =120Kmph
Curve No. 122 (UP)
Delta: 8°05'06"
R = 1146.0m
TL =81.0m
CCL =161.8m
TEL =160.0m
SE =90mm
Vmax =130Kmph
Curve No. 123 (UP)
Delta: 2°42'53"
R = 874.0m
TL =20.7m
CCL =41.5m
TEL =40.0m
SE =15mm
Vmax =120Kmph
Curve No. 124 (UP)
Delta: 8°05'06"
R = 1146.0m
TL =81.0m
CCL =161.8m
TEL =160.0m
SE =90mm
Vmax =130Kmph
Curve No. 125 (UP)
Delta: 2°42'53"
R = 874.0m
TL =20.7m
CCL =41.5m
TEL =40.0m
SE =15mm
Vmax =120Kmph
Curve No. 126 (UP)
Delta: 8°05'06"
R = 1146.0m
TL =81.0m
CCL =161.8m
TEL =160.0m
SE =90mm
Vmax =130Kmph
Curve No. 127 (UP)
Delta: 2°42'53"
R = 874.0m
TL =20.7m
CCL =41.5m
TEL =40.0m
SE =15mm
Vmax =120Kmph
Curve No. 128 (UP)
Delta: 8°05'06"
R = 1146.0m
TL =81.0m
CCL =161.8m
TEL =160.0m
SE =90mm
Vmax =130Kmph
Curve No. 129 (UP)
Delta: 2°42'53"
R = 874.0m
TL =20.7m
CCL =41.5m
TEL =40.0m
SE =15mm
Vmax =120Kmph
Curve No. 130 (UP)
Delta: 8°05'06"
R = 1146.0m
TL =81.0m
CCL =161.8m
TEL =160.0m
SE =90mm
Vmax =130Kmph
Curve No. 131 (UP)
Delta: 2°42'53"
R = 874.0m
TL =20.7m
CCL =41.5m
TEL =40.0m
SE =15mm
Vmax =120Kmph
Curve No. 132 (UP)
Delta: 8°05'06"
R = 1146.0m
TL =81.0m
CCL =161.8m
TEL =160.0m
SE =90mm
Vmax =130Kmph
Curve No. 133 (UP)
Delta: 2°42'53"
R = 874.0m
TL =20.7m
CCL =41.5m
TEL =40.0m
SE =15mm
Vmax =120Kmph
Curve No. 134 (UP)
Delta: 8°05'06"
R = 1146.0m
TL =81.0m
CCL =161.8m
TEL =160.0m
SE =90mm
Vmax =130Kmph
Curve No. 135 (UP)
Delta: 2°42'53"
R = 874.0m
TL =20.7m
CCL =41.5m
TEL =40.0m
SE =15mm
Vmax =120Kmph
Curve No. 136 (UP)
Delta: 8°05'06"
R = 1146.0m
TL =81.0m
CCL =161.8m
TEL =160.0m
SE =90mm
Vmax =130Kmph
Curve No. 137 (UP)
Delta: 2°42'53"
R = 874.0m
TL =20.7m
CCL =41.5m
TEL =40.0m
SE =15mm
Vmax =120Kmph
Curve No. 138 (UP)
Delta: 8°05'06"
R = 1146.0m
TL =81.0m
CCL =161.8m
TEL =160.0m
SE =90mm
Vmax =130Kmph
Curve No. 139 (UP)
Delta: 2°42'53"
R = 874.0m
TL =20.7m
CCL =41.5m
TEL =40.0m
SE =15mm
Vmax =120Kmph
Curve No. 140 (UP)
Delta: 8°05'06"
R = 1146.0m
TL =81.0m
CCL =161.8m
TEL =160.0m
SE =90mm
Vmax =130Kmph
Curve No. 141 (UP)
Delta: 2°42'53"
R = 874.0m
TL =20.7m
CCL =41.5m
TEL =40.0m
SE =15mm
Vmax =120Kmph
Curve No. 142 (UP)
Delta: 8°05'06"
R = 1146.0m
TL =81.0m
CCL =161.8m
TEL =160.0m
SE =90mm
Vmax =130Kmph
Curve No. 143 (UP)
Delta: 2°42'53"
R = 874.0m
TL =20.7m
CCL =41.5m
TEL =40.0m
SE =15mm
Vmax =120Kmph
Curve No. 144 (UP)
Delta: 8°05'06"
R = 1146.0m
TL =81.0m
CCL =161.8m
TEL =160.0m
SE =90mm
Vmax =130Kmph
Curve No. 145 (UP)
Delta: 2°42'53"
R = 874.0m
TL =20.7m
CCL =41.5m
TEL =40.0m
SE =15mm
Vmax =120Kmph
Curve No. 146 (UP)
Delta: 8°05'06"
R = 1146.0m
TL =81.0m
CCL =161.8m
TEL =160.0m
SE =90mm
Vmax =130Kmph
Curve No. 147 (UP)
Delta: 2°42'53"
R = 874.0m
TL =20.7m
CCL =41.5m
TEL =40.0m
SE =15mm
Vmax =120Kmph
Curve No. 148 (UP)
Delta: 8°05'06"
R = 1146.0m
TL =81.0m
CCL =161.8m
TEL =160.0m
SE =90mm
Vmax =130Kmph
Curve No. 149 (UP)
Delta: 2°42'53"
R = 874.0m
TL =20.7m
CCL =41.5m
TEL =40.0m
SE =15mm
Vmax =120Kmph
Curve No. 150 (UP)
Delta: 8°05'06"
R = 1146.0m
TL =81.0m
CCL =161.8m
TEL =160.0m
SE =90mm
Vmax =130Kmph
Curve No. 151 (UP)
Delta: 2°42'53"
R = 874.0m
TL =20.7m
CCL =41.5m
TEL =40.0m
SE =15mm
Vmax =120Kmph
Curve No. 152 (UP)
Delta: 8°05'06"
R = 1146.0m
TL =81.0m
CCL =161.8m
TEL =160.0m
SE =90mm
Vmax =130Kmph
Curve No. 153 (UP)
Delta: 2°42'53"
R = 874.0m
TL =20.7m
CCL =41.5m
TEL =40.0m
SE =15mm
Vmax =120Kmph
Curve No. 154 (UP)
Delta: 8°05'06"
R = 1146.0m
TL =81.0m
CCL =161.8m
TEL =160.0m
SE =90mm
Vmax =130Kmph
Curve No. 155 (UP)
Delta: 2°42'53"
R = 874.0m
TL =20.7m
CCL =41.5m
TEL =40.0m
SE =15mm
Vmax =120Kmph
Curve No. 156 (UP)
Delta: 8°05'06"
R = 1146.0m
TL =81.0m
CCL =161.8m
TEL =160.0m
SE =90mm
Vmax =130Kmph
Curve No. 157 (UP)
Delta: 2°42'53"
R = 874.0m
TL =20.7m
CCL =41.5m
TEL =40.0m
SE =15mm
Vmax =120Kmph
Curve No. 158 (UP)
Delta: 8°05'06"
R = 1146.0m
TL =81.0m
CCL =161.8m
TEL =160.0m
SE =90mm
Vmax =130Kmph
Curve No. 159 (UP)
Delta: 2°42'53"
R = 874.0m
TL =20.7m
CCL =41.5m
TEL =40.0m
SE =15mm
Vmax =120Kmph
Curve No. 160 (UP)
Delta: 8°05'06"
R = 1146.0m
TL =81.0m
CCL =161.8m
TEL =160.0m
SE =90mm
Vmax =130Kmph
Curve No. 161 (UP)
Delta: 2°42'53"
R = 874.0m
TL =20.7m
CCL =41.5m
TEL =40.0m
SE =15mm
Vmax =120Kmph
Curve No. 162 (UP)
Delta: 8°05'06"
R = 1146.0m
TL =81.0m
CCL =161.8m
TEL =160.0m
SE =90mm
Vmax =130Kmph
Curve No. 163 (UP)
Delta: 2°42'53"
R = 874.0m
TL =20.7m
CCL =41.5m
TEL =40.0m
SE =15mm
Vmax =120Kmph
Curve No. 164 (UP)
Delta: 8°05'06"
R = 1146.0m
TL =81.0m
CCL =161.8m
TEL =160.0m
SE =90mm
Vmax =130Kmph
Curve No. 165 (UP)
Delta: 2°42'53"
R = 874.0m
TL =20.7m
CCL =41.5m
TEL =40.0m
SE =15mm
Vmax =120Kmph
Curve No. 166 (UP)
Delta: 8°05'06"
R = 1146.0m
TL =81.0m
CCL =161.8m
TEL =160.0m
SE =90mm
Vmax =130Kmph
Curve No. 167 (UP)
Delta: 2°42'53"
R = 874.0m
TL =20.7m
CCL =41.5m
TEL =40.0m
SE =15mm
Vmax =120Kmph
Curve No. 168 (UP)
Delta: 8°05'06"
R = 1146.0m
TL =81.0m
CCL =161.8m
TEL =160.0m
SE =90mm
Vmax =130Kmph
Curve No. 169 (UP)
Delta: 2°42'53"
R = 874.0m
TL =20.7m
CCL =41.5m
TEL =40.0m
SE =15mm
Vmax =120Kmph
Curve No. 170 (UP)
Delta: 8°05'06"
R = 1146.0m
TL =81.0m
CCL =161.8m
TEL =160.0m
SE =90mm
Vmax =130Kmph
Curve No. 171 (UP)
Delta: 2°42'53"
R = 874.0m
TL =20.7m
CCL =41.5m
TEL =40.0m
SE =15mm
Vmax =120Kmph
Curve No. 172 (UP)
Delta: 8°05'06"
R = 1146.0m
TL =81.0m
CCL =161.8m
TEL =160.0m
SE =90mm
Vmax =130Kmph
Curve No. 173 (UP)
Delta: 2°42'53"
R = 874.0m
TL =20.7m
CCL =41.5m
TEL =40.0m
SE =15mm
Vmax =120Kmph
Curve No. 174 (UP)
Delta: 8°05'06"
R = 1146.0m
TL =81.0m
CCL =161.8m
TEL =160.0m
SE =90mm
Vmax =130Kmph
Curve No. 175 (UP)
Delta: 2°42'53"
R = 874.0m
TL =20.7m
CCL =41.5m
TEL =40.0m
SE =15mm
Vmax =120Kmph
Curve No. 176 (UP)
Delta: 8°05'06"
R = 1146.0m
TL =81.0m
CCL =161.8m
TEL =160.0m
SE =90mm
Vmax =130Kmph
Curve No. 177 (UP)
Delta: 2°42'53"
R = 874.0m
TL =20.7m
CCL =41.5m
TEL =40.0m
SE =15mm
Vmax =120Kmph
Curve No. 178 (UP)
Delta: 8°05'06"
R = 1146.0m
TL =81.0m
CCL =161.8m
TEL =160.0m
SE =90mm
Vmax =130Kmph
Curve No. 179 (UP)
Delta: 2°42'53"
R = 874.0m
TL =20.7m
CCL =41.5m
TEL =40.0m
SE =15mm
Vmax =120Kmph
Curve No. 180 (UP)
Delta: 8°05'06"
R = 1146.0m
TL =81.0m
CCL =161.8m
TEL =160.0m
SE =90mm
Vmax =130Kmph
Curve No. 181 (UP)
Delta: 2°42'53"
R = 874.0m
TL =20.7m
CCL =41.5m
TEL =40.0m
SE =15mm
Vmax =120Kmph
Curve No. 182 (UP)
Delta: 8°05'06"
R = 1146.0m
TL =81.0m
CCL =161.8m
TEL =160.0m
SE =90mm
Vmax =130Kmph
Curve No. 183 (UP)
Delta: 2°42'53"
R = 874.0m
TL =20.7m
CCL =41.5m
TEL =40.0m
SE =15mm
Vmax =120Kmph
Curve No. 184 (UP)
Delta: 8°05'06"
R = 1146.0m
TL =81.0m
CCL =161.8m
TEL =160.0m
SE =90mm
Vmax =130Kmph
Curve No. 185 (UP)
Delta: 2°42'53"
R = 874.0m
TL =20.7m
CCL =41.5m
TEL =40.0m
SE =15mm
Vmax =120Kmph
Curve No. 186 (UP)
Delta: 8°05'06"
R = 1146.0m
TL =81.0m
CCL =161.8m
TEL =160.0m
SE =90mm
Vmax =130Kmph
Curve No. 187 (UP)
Delta: 2°42'53"
R = 874.0m
TL =20.7m
CCL =41.5m
TEL =40.0m
SE =15mm
Vmax =120Kmph
Curve No. 188 (UP)
Delta: 8°05'06"
R = 1146.0m
TL =81.0m
CCL =161.8m
TEL =160.0m
SE =90mm
Vmax =130Kmph
Curve No. 189 (UP)
Delta: 2°42'53"
R = 874.0m
TL =20.7m
CCL =41.5m
TEL =40.0m
SE =15mm
Vmax =120Kmph
Curve No. 190 (UP)
Delta: 8°05'06"
R = 1146.0m
TL =81.0m
CCL =161.8m
TEL =160.0m
SE =90mm
Vmax =130Kmph
Curve No. 191 (UP)
Delta: 2°42'53"
R = 874.0m
TL =20.7m
CCL =41.5m
TEL =40.0m
SE =15mm
Vmax =120Kmph
Curve No. 192 (UP)
Delta: 8°05'06"
R = 1146.0m
TL =81.0m
CCL =161.8m
TEL =160.0m
SE =90mm
Vmax =130Kmph
Curve No. 193 (UP)
Delta: 2°42'53"
R = 874.0m
TL =20.7m
CCL =41.5m
TEL =40.0m
SE =15mm
Vmax =120Kmph
Curve No. 194 (UP)
Delta: 8°05'06"
R = 1146.0m
TL =81.0m
CCL =161.8m
TEL =160.0m
SE =90mm
Vmax =130Kmph
Curve No. 195 (UP)
Delta: 2°42'53"
R = 874.0m
TL =20.7m
CCL =41.5m
TEL =40.0m
SE =15mm
Vmax =120Kmph
Curve No. 196 (UP)
Delta: 8°05'06"
R = 1146.0m
TL =81.0m
CCL =161.8m
TEL =160.0m
SE =90mm
Vmax =130Kmph
Curve No. 197 (UP)
Delta: 2°42'53"
R = 874.0m
TL =20.7m
CCL =41.5m
TEL =40.0m
SE =15mm
Vmax =120Kmph
Curve No. 198 (UP)
Delta: 8°05'06"
R = 1146.0m
TL =81.0m
CCL =161.8m
TEL =160.0m
SE =90mm
Vmax =130Kmph
Curve No. 199 (UP)
Delta: 2°42'53"
R = 874.0m
TL =20.7m
CCL =41.5m
TEL =40.0m
SE =15mm
Vmax =120Kmph
Curve No. 200 (UP)
Delta: 8°05'06"
R = 1146.0m
TL =81.0m
CCL =161.8m
TEL =160.0m
SE =90mm
Vmax =130Kmph
Curve No. 201 (UP)
Delta: 2°42'53"
R = 874.0m
TL =20.7m
CCL =41.5m
TEL =40.0m
SE =15mm
Vmax =120Kmph
Curve No. 202 (UP)
Delta: 8°05'06"
R = 1146.0m
TL =81.0m
CCL =161.8m
TEL =160.0m
SE =90mm
Vmax =130Kmph
Curve No. 203 (UP)
Delta: 2°42'53"
R = 874.0m
TL =20.7m
CCL =41.5m
TEL =40.0m
SE =15mm
Vmax =120Kmph
Curve No. 204 (UP)
Delta: 8°05'06"
R = 1146.0m
TL =81.0m
CCL =161.8m
TEL =160.0m
SE =90mm
Vmax =130Kmph
Curve No. 205 (UP)
Delta: 2°42'53"
R = 874.0m
TL =20.7m
CCL =41.5m
TEL =40.0m
SE =15mm
Vmax =120Kmph
Curve No. 206 (UP)
Delta: 8°05'06"
R = 1146.0m
TL =81.0m
CCL =161.8m
TEL =160.0m
SE =90mm
Vmax =130Kmph
Curve No. 207 (UP)
Delta: 2°42'53"
R = 874.0m
TL =20.7m
CCL =41.5m
TEL =40.0m
SE =15mm
Vmax =120Kmph
Curve No. 208 (UP)
Delta: 8°05'06"
R = 1146.0m
TL =81.0m
CCL =161.8m
TEL =160.0m
SE =90mm
Vmax =130Kmph
Curve No. 209 (UP)
Delta: 2°42'53"
R = 874.0m
TL =20.7m
CCL =41.5m
TEL =40.0m
SE =15mm
Vmax =120Kmph
Curve No. 210 (UP)
Delta: 8°05'06"
R = 1146.0m
TL =81.0m
CCL =161.8m
TEL =160.0m
SE =90mm
Vmax =130Kmph
Curve No. 211 (UP)
Delta: 2°42'53"
R = 874.0m
TL =20.7m
CCL =41.5m
TEL =40.0m
SE =15mm
Vmax =120Kmph
Curve No. 212 (UP)
Delta: 8°05'06"
R = 1146.0m
TL =81.0m
CCL =161.8m
TEL =160.0m
SE =90mm
Vmax =130Kmph
Curve No. 213 (UP)
Delta: 2°42'53"
R = 874.0m
TL =20.7m
CCL =41.5m
TEL =40.0m
SE =15mm
Vmax =120Kmph
Curve No. 214 (UP)
Delta: 8°05'06"
R = 1146.0m
TL =81.0m
CCL =161.8m
TEL =160.0m
SE =90mm
Vmax =130Kmph
Curve No. 215 (UP)
Delta: 2°42'53"
R = 874.0m
TL =20.7m
CCL =41.5m
TEL =40.0m
SE =15mm
Vmax =120Kmph
Curve No. 216 (UP)
Delta: 8°05'06"
R = 1146.0m
TL =81.0m
CCL =161.8m
TEL =160.0m
SE =90mm
Vmax =130Kmph
Curve No. 217 (UP)
Delta: 2°42'53"
R = 874.0m
TL =20.7m
CCL =41.5m
TEL =40.0m
SE =15mm
Vmax =120Kmph
Curve No. 218 (UP)
Delta: 8°05'06"
R = 1146.0m
TL =81.0m
CCL =161.8m
TEL =160.0m
SE =90mm
Vmax =130Kmph
Curve No. 219 (UP)
Delta: 2°42'53"
R = 874.0m
TL =20.7m
CCL =41.5m
TEL =40.0m
SE =15mm
Vmax =120Kmph
Curve No. 220 (UP)
Delta: 8°05'06"
R = 1146.0m
TL =81.0m
CCL =161.8m
TEL =160.0m
SE =90mm
Vmax =130Kmph
Curve No. 221 (UP)
Delta: 2°42'53"
R = 874.0m
TL =20.7m
CCL =41.5m
TEL =40.0m
SE =15mm
Vmax =120Kmph
Curve No. 222 (UP)
Delta: 8°05'06"
R = 1146.0m
TL =81.0m
CCL =161.8m
TEL =160.0m
SE =90mm
Vmax =130Kmph
Curve No. 223 (UP)
Delta: 2°42'53"
R = 874.0m
TL =20.7m
CCL =41.5m
TEL =40.0m
SE =15mm
Vmax =120Kmph
Curve No. 224 (UP)
Delta: 8°05'06"
R = 1146.0m
TL =81.0m
CCL =161.8m
TEL =160.0m
SE =90mm
Vmax =130Kmph
Curve No. 225 (UP)
Delta: 2°42'53"
R = 874.0m
TL =20.7m
CCL =41.5m
TEL =40.0m
SE =15mm
Vmax =120Kmph
Curve No. 226 (UP)
Delta: 8°05'06"
R = 1146.0m
TL =81.0m
CCL =161.8m
TEL =160.0m
SE =90mm
Vmax =130Kmph
Curve No. 227 (UP)
Delta: 2°42'53"
R = 874.0m
TL =20.7m
CCL =41.5m
TEL =40.0m
SE =15mm
Vmax =120Kmph
Curve No. 228 (UP)
Delta: 8°05'06"
R = 1146.0m
TL =81.0m
CCL =161.8m
TEL =160.0m
SE =90mm
Vmax =130Kmph
Curve No. 229 (UP)
Delta: 2°42'53"
R = 874.0m
TL =20.7m
CCL =41.5m
TEL =40.0m
SE =15mm
Vmax =120Kmph
Curve No. 230 (UP)
Delta: 8°05'06"
R = 1146.0m
TL =81.0m
CCL =161.8m
TEL =160.0m
SE =90mm
Vmax =130Kmph
Curve No. 231 (UP)
Delta: 2°42'53"
R = 874.0m
TL =20.7m
CCL =41.5m
TEL =40.0m
SE =15mm
Vmax =120Kmph
Curve No. 232 (UP)
Delta: 8°05'06"
R = 1146.0m
TL =81.0m
CCL =161.8m
TEL =160.0m
SE =90mm
Vmax =130Kmph
Curve No. 233 (UP)
Delta: 2°42'53"
R = 874.0m
TL =20.7m
CCL =41.5m
TEL =40.0m
SE =15mm
Vmax =120Kmph
Curve No. 234 (UP)
Delta: 8°05'06"
R = 1146.0m
TL =81.0m
CCL =161.8m
TEL =160.0m
SE =90mm
Vmax =130Kmph
Curve No. 235 (UP)
Delta: 2°42'53"
R = 874.0m
TL =20.7m
CCL =41.5m
TEL =40.0m
SE =15mm
Vmax =120Kmph
Curve No. 236 (UP)
Delta: 8°05'06"
R = 1146.0m
TL =81.0m
CCL =161.8m
TEL =160.0m
SE =90mm
Vmax =130Kmph
Curve No. 237 (UP)
Delta: 2°42'53"
R = 874.0m
TL =20.7m
CCL =41.5m
TEL =40.0m
SE =15mm
Vmax =120Kmph
Curve No. 238 (UP)
Delta: 8°05'06"
R = 1146.0m
TL =81.0m
CCL =161.8m
TEL =160.0m
SE =90mm
Vmax =130Kmph
Curve No. 239 (UP)
Delta: 2°42'53"
R = 874.0m
TL =20.7m
CCL =41.5m
TEL =40.0m
SE =15mm
Vmax =120Kmph
Curve No. 240 (UP)
Delta: 8°05'06"
R = 1146.0m
TL =81.0m
CCL =161.8m
TEL =160.0m
SE =90mm
Vmax =130Kmph
Curve No. 241 (UP)
Delta: 2°42'53"
R = 874.0m
TL =20.7m
CCL =41.5m
TEL =40.0m
SE =15mm
Vmax =120Kmph
Curve No. 242 (UP)
Delta: 8°05'06"
R = 1146.0m
TL =81.0m
CCL =161.8m
TEL =160.0m
SE =90mm
Vmax =130Kmph
Curve No. 243 (UP)
Delta: 2°42'53"
R = 874.0m
TL =20.7m
CCL =41.5m
TEL =40.0m
SE =15mm
Vmax =120Kmph
Curve No. 244 (UP)
Delta: 8°05'06"
R = 1146.0m
TL =81.0m
CCL =161.8m
TEL =160.0m
SE =90mm
Vmax =130Kmph
Curve No. 245 (UP)
Delta: 2°42'53"
R = 874.0m
TL =20.7m
CCL =41.5m
TEL =40.0m
SE =15mm
Vmax =120Kmph

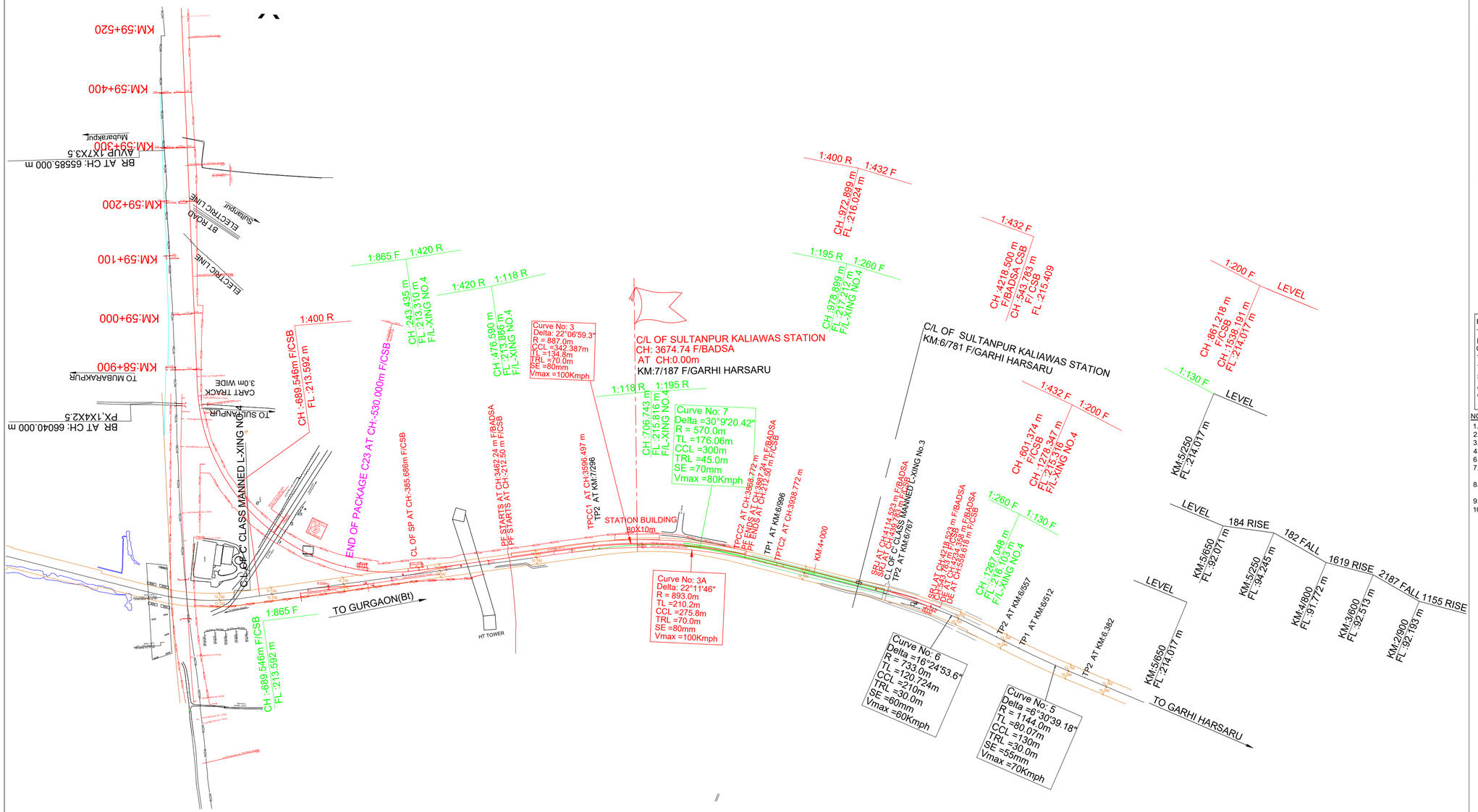

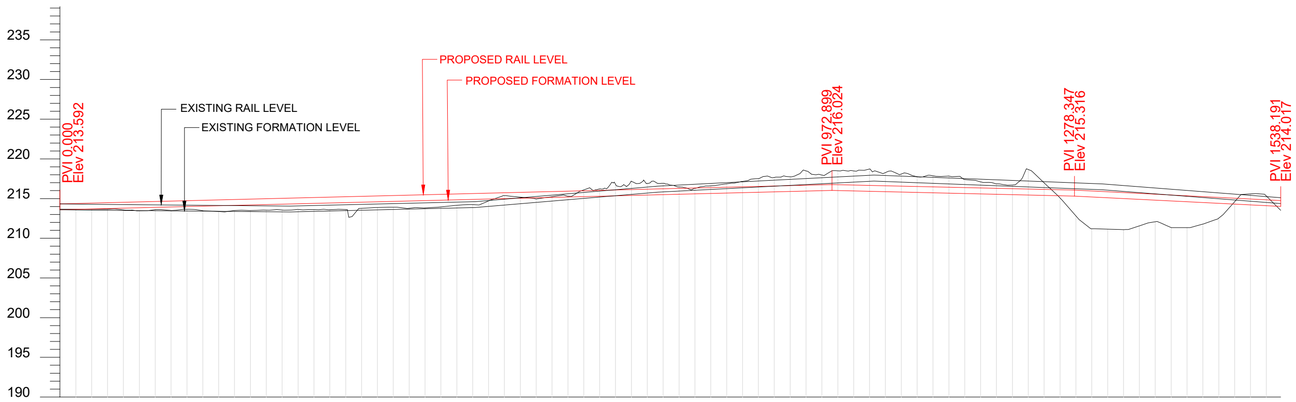

HORIZONTAL ALIGNMENT	TRL=70m, R =893m, TRL=70m
VERTICAL ALIGNMENT	L=972.899m 1:400 R; L=305.448m 1:-432 R; L=259.844m 1:-200 R

DIFF. B/W EXIST. RAIL LEVEL & PROP. RAIL LEVEL	PROPOSED RAIL LEVEL	PROPOSED FORMATION LEVEL	EXISITNG RAIL LEVEL	GROUND LEVELS	CHAINAGES
0.000	214.334	213.592	214.334	213.661	680.546
+0.073	214.384	213.642	214.311	213.648	680.0
+0.146	214.434	213.692	214.288	213.657	660.0
+0.220	214.484	213.742	214.264	213.667	640.0
+0.293	214.534	213.792	214.241	213.572	620.0
+0.366	214.584	213.842	214.218	213.452	600.0
+0.439	214.634	213.892	214.195	213.611	580.0
+0.512	214.684	213.942	214.172	213.505	560.0
+0.585	214.734	213.992	214.149	213.655	540.0
+0.658	214.784	214.042	214.126	213.478	520.0
+0.731	214.834	214.092	214.103	213.372	500.0
+0.805	214.884	214.142	214.079	213.496	480.0
+0.878	214.934	214.192	214.056	213.497	460.0
+0.892	214.984	214.242	214.092	213.548	440.0
+0.895	215.034	214.292	214.139	213.559	420.0
+0.897	215.084	214.342	214.187	213.624	400.0
+0.899	215.134	214.392	214.235	213.610	380.0
+0.902	215.184	214.442	214.282	213.611	360.0
+0.904	215.234	214.492	214.330	213.626	340.0
+0.906	215.284	214.542	214.378	213.776	320.0
+0.909	215.334	214.592	214.425	213.883	300.0
+0.911	215.384	214.642	214.473	213.921	280.0
+0.914	215.434	214.692	214.520	213.786	260.0
+0.916	215.484	214.742	214.568	213.827	240.0
+0.898	215.534	214.792	214.636	213.959	220.0
+0.778	215.584	214.842	214.806	214.152	200.0
+0.659	215.634	214.892	214.975	214.236	180.0
+0.539	215.684	214.942	215.145	214.718	160.0
+0.420	215.734	214.992	215.314	215.382	140.0
+0.300	215.784	215.042	215.484	215.178	120.0
+0.181	215.834	215.092	215.653	214.951	100.0
+0.061	215.884	215.142	215.823	215.237	80.0
-0.085	215.934	215.192	215.992	215.302	60.0
-0.178	215.984	215.242	216.162	216.095	40.0
-0.297	216.034	215.292	216.331	216.216	20.0
-0.417	216.084	215.342	216.501	216.794	0.0
-0.492	216.134	215.392	216.626	216.909	40.0
-0.544	216.184	215.442	216.728	216.918	60.0
-0.597	216.234	215.492	216.831	216.458	80.0
-0.650	216.284	215.542	216.934	216.300	100.0
-0.702	216.334	215.592	217.036	216.612	120.0
-0.755	216.384	215.642	217.139	216.855	140.0
-0.807	216.434	215.692	217.241	217.167	160.0
-0.860	216.484	215.742	217.344	217.521	180.0
-0.912	216.534	215.792	217.446	217.669	200.0
-0.965	216.584	215.842	217.549	217.755	220.0
-1.018	216.634	215.892	217.652	217.754	240.0
-1.070	216.684	215.942	217.754	217.966	260.0
-1.123	216.734	215.992	217.857	217.949	280.0
-1.199	216.750	216.007	217.949	218.497	300.0
-1.169	216.703	215.961	217.872	218.493	320.0
-1.139	216.657	215.914	217.796	218.726	340.0
-1.109	216.610	215.868	217.719	218.274	360.0
-1.078	216.564	215.822	217.642	218.094	380.0
-1.047	216.518	215.775	217.565	217.750	400.0
-1.017	216.471	215.729	217.488	217.871	420.0
-0.986	216.425	215.683	217.411	217.829	440.0
-0.955	216.379	215.636	217.334	217.407	460.0
-0.925	216.332	215.590	217.257	217.114	480.0
-0.894	216.286	215.544	217.180	216.861	500.0
-0.863	216.240	215.497	217.103	216.709	520.0
-0.833	216.193	215.451	217.028	218.659	540.0
-0.802	216.147	215.405	216.949	216.979	560.0
-0.771	216.101	215.358	215.086	216.872	580.0
-0.696	216.050	215.307	216.746	212.818	600.0
-0.642	215.950	215.207	216.592	211.204	620.0
-0.588	215.850	215.107	216.438	211.150	640.0
-0.534	215.750	215.007	216.284	211.076	660.0
-0.480	215.650	214.907	216.130	211.569	680.0
-0.426	215.550	214.807	215.976	212.076	700.0
-0.373	215.450	214.707	215.823	211.348	720.0
-0.319	215.350	214.607	215.669	211.344	740.0
-0.265	215.250	214.507	215.515	211.793	760.0
-0.211	215.150	214.407	215.361	212.541	780.0
-0.157	215.050	214.307	215.207	214.616	800.0
-0.102	214.950	214.207	215.053	215.584	820.0
-0.050	214.850	214.107	214.900	215.320	840.0
-0.010	214.750	214.017	214.760	213.514	860.0

LEGEND:

- EXISTING RAILWAY TRACK
- PROPOSED UP & DN LINE
- DISMANTLING WORKS
- PROPOSED DIVERSIONS
- EXISTING ROAD
- PRO.HORC BOUNDARY
- EXPRESSWAY BOUNDARY
- EXISTING RAILWAY BOUNDARY
- HT LINE
- ELECTRICAL LINE(LT)
- STREAM / CANAL / DRAIN
- WELL
- POND

F/CSB-FROM CENTER LINE OF STN BLDG	RH - RIGHT HANDED
TP1 & TP2 - TANGENT POINT	LH - LEFT HANDED
R - RADIUS	FM - FOULING MARK
CCL - CIRCULAR CURVE LENGTH	SRJ - STOCK RAIL JOINT
TL - TANGENT LENGTH	TS - TRAP SWITCH
TR - TRANSITION LENGTH	DE - DEAD END
SE - SUPERELEVATION	Rr - RESULTANT RADIUS
Δ - DEFLECTION ANGLE	D - DEGREE OF CURVE
CSR - CLEAR STANDING ROOM	RH - RELAY HUT
SSP - SUB SECTIONING & PARALLING POST	

NOTE:

1. ALL DIMENSIONS ARE SHOWN IN METRES.
2. CH:0.00 IS RECKONED FOR C.L OF STATION BUILDING.
3. EXISTING WORK SHOWN IN BLACK.
4. PROPOSED WORK SHOWN IN RED.
6. ISOLATION WILL BE PROVIDED AS PER STD .IIR.
7. STD IIR ELECTRONIC INTERLOCKING WITH MACL SIGNALLING WILL BE PROVIDED.
8. ALL POINTS AND CROSSINGS ARE TO BE PROVIDED WITH FAN SHAPED CURVED SWITCHES ON CONCRETE SLEEPER .
9. CHAINAGES ARE RECKONED FROM C.L OF PIRTHALA STATION
10. RULING GRADIENT FOR THIS SECTION IS 1 IN 150 COMPENSATED

PROPOSED TRACK STRUCTURE (TO SUIT FOR 25T AXLE LOAD

I. FOR RAIL CORRIDOR: 160KMPH Speed
- TRACK = 60KG RAILS
- SLEEPER DENSITY : PSC SLEEPERS = 1660 No.S PER KM
- BALLAST CUSHION : 350mm
- ALL TURNOUTS ARE 1 in 12 UNLESS OTHERWISE SPECIFIED.

GC/HORC		HRIDC	
NAME / DESIGNATION	SIGN	NAME / DESIGNATION	SIGN
CHAHATEY RAM PD		R.R.KUMAR GM IP&P/HRIDC	
SUDHIR AGRAWAL DPD/CIVIL		UMA.M.RAO DGM/C/WEST	
KRISHAN CHAND SAINSI CRE/CIVIL			

NORTHERN RAILWAY

DRM-DLI	
ADRM-INFRA-DLI	
SRDEN-CO-DLI	
SRDOM- DLI	
SRDSTE-DLI	
SRDEE-TRD-DLI	
SRDEN-5-DLI	
ADEN-DEE	
SSE-PWAY-GGN	
SSE-W-GGN	

NR.DIVL FILE NO.	
NR.DIVL PLAN NO.	
NRHQ CASE NO.	
NRHQ PLAN NO.	

PROJECT:
HARYANA ORBITAL RAIL CORRIDOR
CONNECTING PALWAL TO SONIPAT BYPASSING DELHI AREA BY LINKING ASAOTI-PATLI-SULTANPUR-ASAUDAH BY NEW ELECTRIFIED BG DOUBLE LINE

CLIENT:
HARYANA RAIL INFRASTRUCTURE DEVELOPMENT CORPORATION LIMITED.

GENERAL CONSULTANT:
GENERAL CONSULTANT FOR HARYANA ORBITAL RAIL CORRIDOR
RITES Limited in consortium with SMEC International Pty. Ltd.

RITES THE INFRASTRUCTURE PEOPLE | SMEC

TITLE :
RE-GRADING OF GARHI HARSARU-FARUKHNAGAR MAIN LINE OF SULTANPUR STATION YARD (CONCEPTUAL)

GC DRG.NO.	GC-HRID-C2-DRW-ALN-P&P-06001-A1
ISSUE DI:	11.11.2022
REVISED DI:	24.12.2022

CONSULTANTS :
aarvee associates
architects engineers & consultants pvt.ltd.
Ravula Residency, Srinagar Colony Main Rd., Hyderabad-82, India
Tel: 91-40-23737633; Fax: 91-40-23735277
e-mail: railways@aarvee.net; web:www.aarvee.net

AARVEE ASSOCIATES

MANISHA (AM CAD) DRAWN	G.PRASAD (M) CHECKED	N.J. RAO (VP) APPROVED

DRG.NO.AA/RLY/2245/HRIDC/ESP-07/REV-3	SHEET No. 1		
SCALE : 1:1000	ISSUED DI: 26.11.2019	REV DI: 18-07-2022	

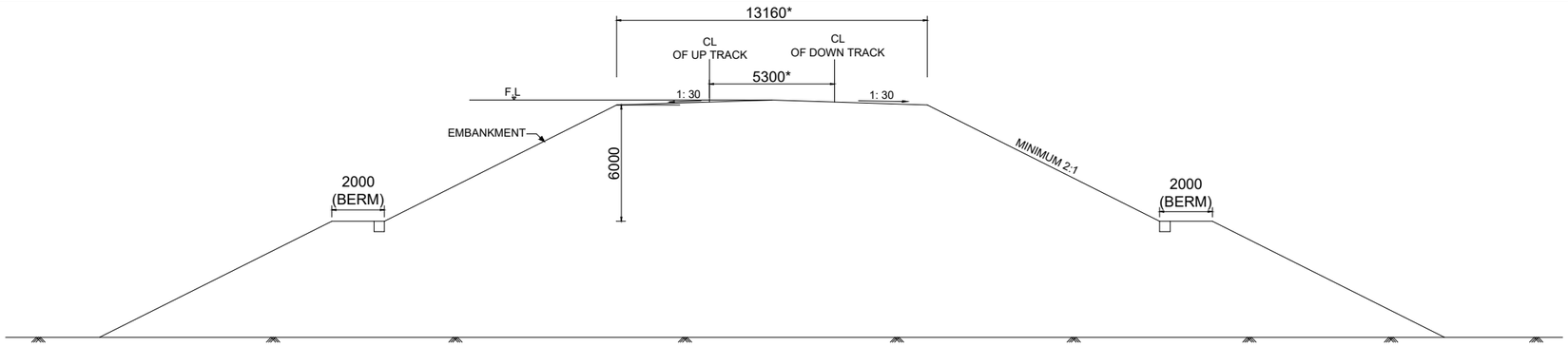

TYPICAL CROSS-SECTION OF EMBANKMENT
(FOR DOUBLE TRACK)

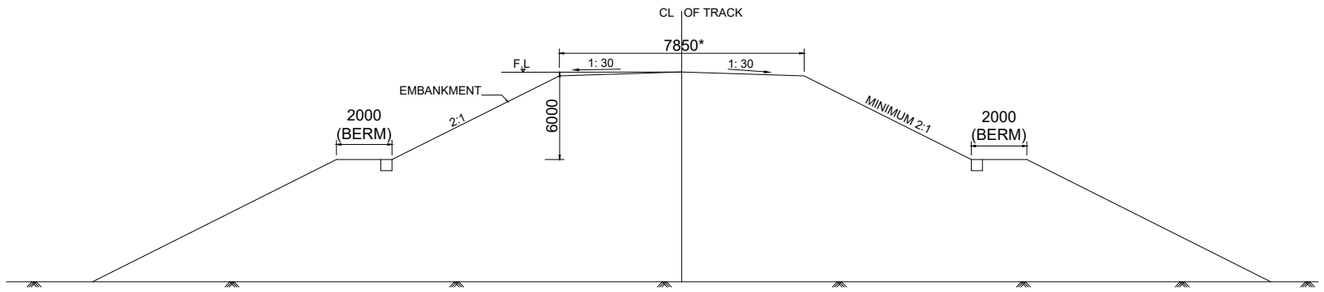

TYPICAL CROSS-SECTION OF EMBANKMENT
(FOR SINGLE TRACK)

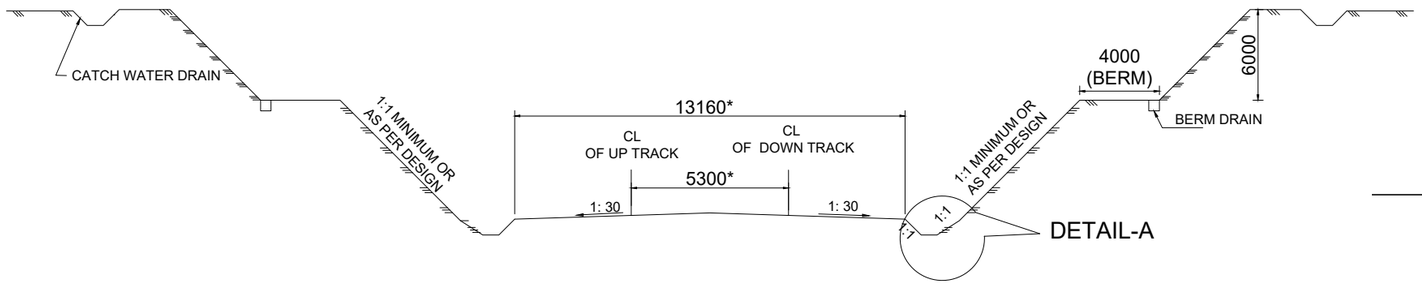

TYPICAL CROSS-SECTION OF CUTTING
(FOR DOUBLE TRACK)

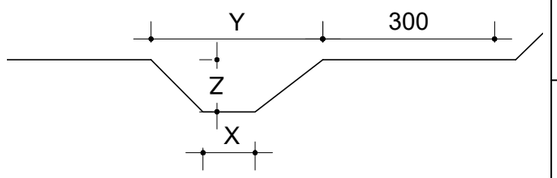

DETAIL-A

NOTES:
1. ALL DIMENSIONS ARE IN MILLIMETERS UNLESS OTHERWISE SPECIFIED.
2. NO DIMENSION SHALL BE SCALED FROM DRAWING ONLY WRITTEN DIMENSIONS ARE TO BE FOLLOWED.
3. DEPTH OF BALLAST CUSHION SHOULD BE PROVIDED AS PER PARA 212(2) OF IRPWM.
4. CROSS SLOPE OF 1IN 30 SHALL BE PROVIDED.
5. MINIMUM FORMATION WIDTH OF 13160 MM SHALL BE ENSURED FOR NEW WORKS IN BOTH EMBANKMENT AND IN CUTTING (EXCLUDING SIDE DRAIN)
6. * FORMATION WIDTH SHALL BE INCREASED BASED ON CURVE & SUPER ELEVATION AS PER IRSOD.
7. X, Y, Z DIMENSIONS SHALL BE AS PER DESIGN.

GC/HORC		HRIDC	
NAME / DESIGNATION	SIGN	NAME / DESIGNATION	SIGN
CHAHATEY RAM PD		R. R. KUMAR GM/ IP&P	
SUDHIR AGRAWAL DPD/CIVIL		RAJU SOLANKI DGM/C-SOUTH	
REETU PATIAL CDE/ CIVIL			

PROJECT:
HARYANA ORBITAL RAIL CORRIDOR
CONNECTING PALWAL TO SONIPAT BYPASSING DELHI AREA BY LINKING ASAOTI-PATLI-SULTANPUR-ASAUDAH BY NEW ELECTRIFIED BG DOUBLE LINE

CLIENT:
HARYANA RAIL INFRASTRUCTURE DEVELOPMENT CORPORATION LIMITED.

CONSULTANT:
GENERAL CONSULTANT FOR
HARYANA ORBITAL RAIL CORRIDOR
RITES Limited in consortium with SMEC International Pty. Ltd.

RITES THE INFRASTRUCTURE PEOPLE | SMEC Member of the Surbana Jurong Group

TITLE:- CONCEPTUAL PLAN
TYPICAL EMBANKMENT/CUTTING PROFILE

DRG. NO.	GC-HRIDC-SK-GEN-001_A2	SHEET NO.

SCALE :	ISSUE DATE	REVISED DATE
AS SHOWN	07-11-2022	09.01.2023

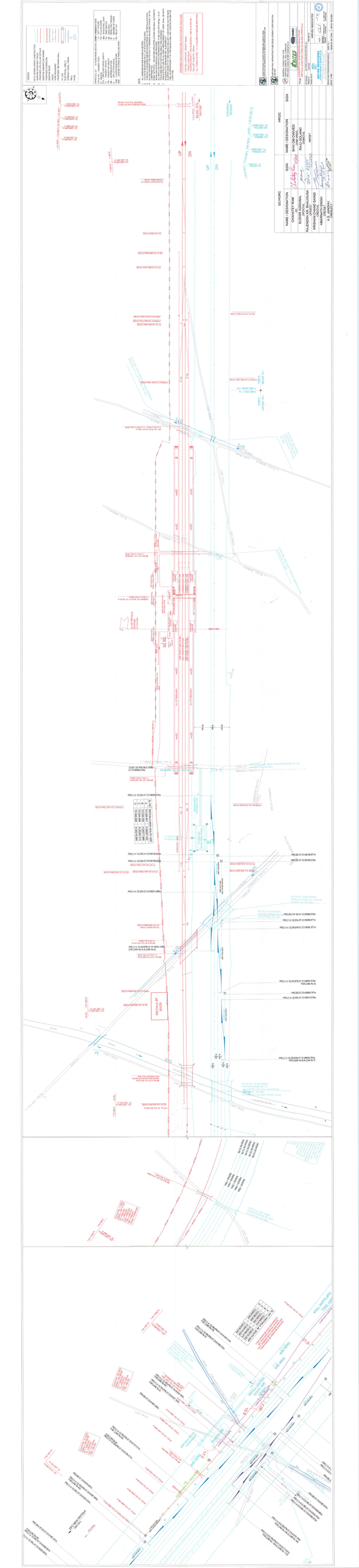

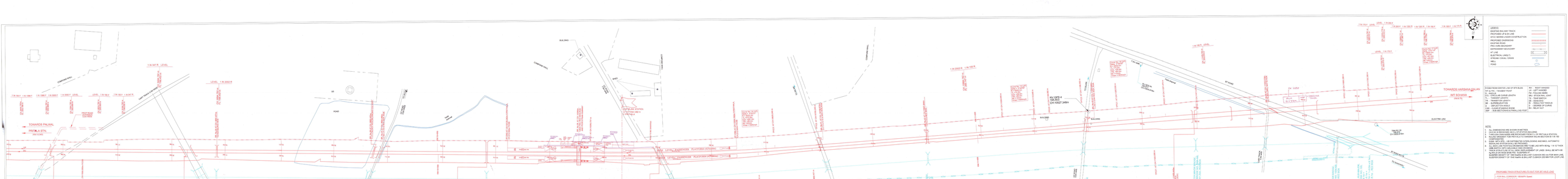

LEGEND:
- EXISTING RAILWAY TRACK
- PROPOSED UP & DN LINE
- (W.O.C. WORKS UNDER CONSTRUCTION)
- PROPOSED OVERDRAW
- ELECTRIC ROAD
- PROPOSED BOUNDARY
- EXPROPRIATION BOUNDARY
- RT LINE
- BRIDGE NO. / LABEL'S
- STREAM / CANAL / DRAIN
- WELL
- POND

FIGS IN FROM CENTRE LINE OF BTR BLDG
- TP & TG - "TANGENT POINT"
- PC - "CURVE BEGIN"
- CCL - "CIRCULAR CURVE LENGTH"
- PT - "POINT OF TANGENT"
- TH - TRANSITION LENGTH
- SE - SUPERELEVATION
- CC - CENTRE OF CURVE
- CAB - CLEAR PASSING BLOW
- SBP - SUB SECTIONAL'S PATH (LONG POST)
- RH - RIGHT HANDED
- LH - LEFT HANDED
- PB - PULLING BARS
- MHJ - BTOXA WALL JOINT
- LB - LEVER BOX
- GB - GEAR BOX
- TI - TEDULTACY TRIPLE
- CP - CONCRETE POST
- BH - RELAY HUT

NOTE:
1. ALL DIMENSIONS ARE SHOWN IN METRES.
2. CHAINAGE OF STATION BUILDING IS ALONG.
3. CABLES ARE SHOWN FOR REFERENCE ONLY.
4. RUNNING SIMULTANEOUSLY FOR PISTA-LA TO HARSANA KALAN SECTION IS 11 N 150 KMPH.
5. ALL WORKS SHALL BE PROVIDED.
6. ALL MAIN LINE POINTS & CROSSINGS ARE TO BE LAID WITH 60 KG. 1 IN 12 TYPE.
7. ALL MAIN LINE POINTS & CROSSINGS ARE TO BE LAID WITH 60 KG. 1 IN 12 TYPE.
8. TRACK STRUCTURE OF ALL NEW PROPOSED PLATFORM OF LINES SHALL BE WITH
- 1 IN 40 GRADIENT UP TO 1000 Meters & 1 IN 200 GRADIENT UP TO 1000 Meters
- RUDDER GRADIENT OF 1 IN 1000 Meters & 1 IN 1,4457 CURVATURE 350 mm FOR MAIN LINE.
- RUDDER GRADIENT OF 1 IN 1000 Meters & 1 IN 2,4457 CURVATURE 350 MM FOR LOOP LINE.

PROPOSED TRACK STRUCTURE ETC AVO FOR 25T AXLE LOAD

1. FOR RAIL CORRIDOR / RSHAPTH Speed
- 130KM/H = 60KG RAILS
- 110KM/H = 52KG RAILS (60 ACCEPTED + 1660 No.S PER KM
- 1MM LIFT CHARTER - 350mm
- 4 ALL TURNOUTS 4160 - 1 in 12 UNLESS OTHERWISE SPECIFIED

GC/HORC		HRIDC	
NAME / DESIGNATION	SIGN	NAME / DESIGNATION	SIGN
CHAHATEY RAM JO		SHIV OM DWIVEDI DPM/ HRDC	
SUDHIR AGRAWAL DPO/VSL		RAJU SOLANKI DOM/VSL	
RAJENDRA KR. BHAUGUNA DPO/EST		AMS&T	
KRISHAN CHAND SAINSI DRO/VSL			
AMARNATH SINGH DRO/EST			
A.S. JANGHU DRE/EST			

PROJECT: HARYANA ORBITAL RAIL CORRIDOR
SECTION: PISTA-LA TO HARSANA KALAN (RSHAPTH)

HARYANA RAIL INFRASTRUCTURE DEVELOPMENT CORPORATION LIMITED

CONSULTANT: RITES LTD. CONSULTANT FOR HARYANA ORBITAL RAIL CORRIDOR

RITES LTD. | RAMBOLL

TITLE: CONCEPTUAL ALIGNMENT PLAN
SILUKHI STATION YARD CH: 105441.950m TO PINTHALA

SCALE: HORIZONTAL 1:2500	VERTICAL	DRAWING NO.
DESIGN BY:	PLOT BY:	DRAWING BY: AARVEE ASSOCIATES

aarvee associates
ARCHITECTS ENGINEERS CONSULTANTS
AHMEDABAD | MUMBAI | DELHI | HYDERABAD | BANGALORE | KOLKATA | CHENNAI | GUWAHATI | LUCKNOW | PUNE | KOCHI

DRAWING NAME: 105441950.DWG
SCALE: 1:2500
DATE OF PLOTTING: 30.11.2019
REVISION NO.: 00
DATE: 30.07.2020

NOTES :-

1. ALL CHAINAGES ARE TAKEN FROM C.L OF PRITHLA STATION BUILDING AS 0.00 M .
2. ALL CHAINAGES AND LEVELS ARE IN METRES.
3. ALL MAIN LINE PTS & CROSSINGS ARE TO BE LAID WITH 60 Kg WITH 1 IN 12 THICK WEB SWITCH WITH WELDABLE CMS CROSSING.
4. TRACK STRUCTURE OF ALL NEW / REPLACEMENT OF LINES SHALL BE OF 60 KG RAILS ON 60 KG PSC SLEEPERS AND WITH SLEEPER DENSITY FOR MAIN LINE 1660 Nos/Km.BALLAST CUSHION 350 MM & FOR LOOP LINE 1540 Nos/Km.BALLAST CUSHION 250 MM.
5. PROVISION HAS BEEN MADE FOR EI/SSI WITH STD. - IIIR DISTRIBUTED INTERLOCKING AND MACL AUTOMATIC SIGNALING SYSTEM.
6. MINIMUM PASSENGER AMENITIES ARE TO BE PROVIDED WHEREVER REQUIRED AS PER RLY.BOARD. NORMS.(AS PER RLY. BOARD'S LT. NO: RB/L&A/005/2012. DTD:11/09/2012).
7. RCC DUCT (300mmX 300mm) SHALL BE PROVIDED ON THE SIDE OF STATION BUILDING FROM CENTRE LINE OF STATION TO 2KM ON EITHER SIDE.

LEGEND	
EXISTING LINE	
PROPOSED LINE	
EXISTING LINE TO BE DISMANTLED	
EXISTING RLY. BOUNDARY	
PROP. RLY. BOUNDARY	
ELECTRIC LINE WITH POLE	
TEMPORARY STRUCTURE	
PERMANENT STRUCTURE	
ROAD	

LEGEND	
NAME BOARD	NB
TP	
PT	
HAND PUMP(H.P)	
WIRE FENCE	
DS, DE	
LIGHT POLE	
LAND TO BE REQUIRED	
FUTURE WORK	
MSDAC	

GC/HORC		HRIDC	
NAME / DESIGNATION	SIGN	NAME / DESIGNATION	SIGN
CHAHATEY RAM PD	Chahatey Ram 19/6/23	SHIV OM DWIVEDI CPM/ HRIDC	
SUDHIR AGRAWAL DPD/CIVIL	[signature]	RAJU SOLANKI DGM/CIVIL	
RAJENDRA KR. BHAUGUNA DPD/EST	राजेन्द्र बहुगुणा 19/06/23	AM/S&T	
KRISHAN CHAND SAINSI CRE/CIVIL	19/06/2023		
AMARNATH SINGH CRE/S&T	Amarnath Singh 19-06-2023		
A.S. JANGHU CRE/ELECT.	19.06.2023 19.06.23		

NORTHERN RAILWAY

DELHI DIVISION

PROJECT:
HARYANA ORBITAL RAIL CORRIDOR
CONNECTING PALWAL TO SONIPAT BYPASSING DELHI AREA BY LINKING ASAOTI-PATLI-SULTANPUR-ASAUDAH BY NEW ELECTRIFIED BG DOUBLE LINE

CLIENT:
HARYANA RAIL INFRASTRUCTURE DEVELOPMENT CORPORATION LIMITED.

GENERAL CONSULTANT:
GENERAL CONSULTANT FOR HARYANA ORBITAL RAIL CORRIDOR
RITES Limited in consortium with SMEC International Pty. Ltd.

RITES THE INFRASTRUCTURE PEOPLE | SMEC

DRAWING NAME	CONCEPTUAL ENGINEERING SCALE PLAN IMT SOHNA
GC/HORC DRG. NO:-	GC-HRIDC-C5-DRW-STN-ESP-SOH01-A0
ISSUE DATE:	15.06.2023 — REVISED DATE:
SCALE	1:1000 1MM:1METRE
SMC DRG. NO:-	HRIDC/PS/LP-1
CONSULTANT:	S.M. CONSULTANTS An ISO 9001 Company Bhubaneswar / Balasore / Secunderabad / South Andaman / New Delhi Web : www.smcindia.com , E-Mail : support@smcindia.com
DRAWN BY:- R.DAS	CHECKED BY:- A. A SAMANT
RELEASED FOR	PRELIMINARY FOR APPROVAL ☐ / TENDER ☑ / CONSTRUCTION ☐

S.M. CONSULTANTS BHUBANESWAR
A. A. SAMANT
PROJECT INCHARGE

NOTES:

1. ALL DIMENSIONS ARE IN MILLIMETERS UNLESS OTHERWISE NOTED.
2. ALL LEVELS ARE IN METERS UNLESS OTHERWISE NOTED.
3. ALL CHAINAGES ARE IN KILOMETERS UNLESS OTHERWISE NOTED.
4. ALL DIMENSIONS SHALL BE VERIFIED ON SITE BEFORE COMMENCEMENT OF WORK.
5. ANY DISCREPANCY SHALL BE REPORTED TO THE ENGINEER IMMEDIATELY.
6. THIS DRAWING SHALL BE READ IN CONJUNCTION WITH ALL OTHER RELEVANT DRAWINGS AND SPECIFICATIONS.
7. ALL WORKS SHALL BE CARRIED OUT IN ACCORDANCE WITH THE APPROVED CONSTRUCTION METHODOLOGY.
8. ALL MATERIALS SHALL BE OF APPROVED QUALITY AND SHALL CONFORM TO THE SPECIFICATIONS.
9. ALL WORKMANSHIP SHALL BE OF A HIGH STANDARD AND SHALL BE CARRIED OUT BY SKILLED PERSONNEL.
10. ALL SAFETY PRECAUTIONS SHALL BE TAKEN DURING THE CONSTRUCTION OF THE WORKS.

LEGEND

EXISTING RAILWAY TRACK		EXISTING BUILDING	
PROPOSED RAILWAY TRACK		PROPOSED BUILDING	
EXISTING ROAD		EXISTING BRIDGE	
PROPOSED ROAD		PROPOSED BRIDGE	
EXISTING RIVER		EXISTING CULVERT	
PROPOSED RIVER		PROPOSED CULVERT	
EXISTING CONTOUR		EXISTING RETAINING WALL	
PROPOSED CONTOUR		PROPOSED RETAINING WALL	
EXISTING POWER LINE		EXISTING TELECOM LINE	
PROPOSED POWER LINE		PROPOSED TELECOM LINE	
EXISTING WATER PIPELINE		EXISTING GAS PIPELINE	
PROPOSED WATER PIPELINE		PROPOSED GAS PIPELINE	
EXISTING FENCE		EXISTING TREE	
PROPOSED FENCE		PROPOSED TREE	
EXISTING GATE		EXISTING SIGNAL	
PROPOSED GATE		PROPOSED SIGNAL	
EXISTING STATION		EXISTING YARD	
PROPOSED STATION		PROPOSED YARD	
EXISTING DEPOT		EXISTING WORKSHOP	
PROPOSED DEPOT		PROPOSED WORKSHOP	
EXISTING OFFICE		EXISTING RESIDENTIAL	
PROPOSED OFFICE		PROPOSED RESIDENTIAL	
EXISTING COMMERCIAL		EXISTING INDUSTRIAL	
PROPOSED COMMERCIAL		PROPOSED INDUSTRIAL	
EXISTING AGRICULTURAL		EXISTING FOREST	
PROPOSED AGRICULTURAL		PROPOSED FOREST	
EXISTING WETLAND		EXISTING GRASSLAND	
PROPOSED WETLAND		PROPOSED GRASSLAND	
EXISTING WATER BODY		EXISTING ROCK	
PROPOSED WATER BODY		PROPOSED ROCK	
EXISTING SOIL		EXISTING SAND	
PROPOSED SOIL		PROPOSED SAND	
EXISTING GRAVEL		EXISTING CLAY	
PROPOSED GRAVEL		PROPOSED CLAY	
EXISTING SILT		EXISTING PEAT	
PROPOSED SILT		PROPOSED PEAT	
EXISTING LATERITE		EXISTING BASALT	
PROPOSED LATERITE		PROPOSED BASALT	
EXISTING GRANITE		EXISTING GNEISS	
PROPOSED GRANITE		PROPOSED GNEISS	
EXISTING SCHIST		EXISTING QUARTZITE	
PROPOSED SCHIST		PROPOSED QUARTZITE	
EXISTING SHALE		EXISTING LIMESTONE	
PROPOSED SHALE		PROPOSED LIMESTONE	
EXISTING SANDSTONE		EXISTING CONGLOMERATE	
PROPOSED SANDSTONE		PROPOSED CONGLOMERATE	
EXISTING BRECCIA		EXISTING TUFF	
PROPOSED BRECCIA		PROPOSED TUFF	
EXISTING OBSIDIAN		EXISTING PUMICE	
PROPOSED OBSIDIAN		PROPOSED PUMICE	
EXISTING SCORIA		EXISTING ASH	
PROPOSED SCORIA		PROPOSED ASH	
EXISTING LAVA		EXISTING MAGMA	
PROPOSED LAVA		PROPOSED MAGMA	
EXISTING VOLCANIC ROCK		EXISTING IGNEOUS ROCK	
PROPOSED VOLCANIC ROCK		PROPOSED IGNEOUS ROCK	
EXISTING METAMORPHIC ROCK		EXISTING SEDIMENTARY ROCK	
PROPOSED METAMORPHIC ROCK		PROPOSED SEDIMENTARY ROCK	

KENYA RAILWAYS
DETAILED DESIGN

PROJECT: NAIROBI-MOMBASA RAIL CORRIDOR
NAIROBI-NAIVASHA SECTION

CLIENT: KENYA RAILWAYS CORPORATION
DEVELOPMENT CORPORATION LIMITED

CONSULTANT: GENERAL CONSULT FOR NAIROBI-NAIVASHA SECTION OF THE NAIROBI-MOMBASA RAILWAY

DRAWING TITLE: GENERAL CONSULT FOR NAIROBI-NAIVASHA SECTION OF THE NAIROBI-MOMBASA RAILWAY

DRAWING NO: NMR-NAI-GEN-DRG-0001

REVISION: 01

DATE: 2023-10-15

SCALE: 1:1000

DRAWN BY: J. DOE

CHECKED BY: A. SMITH

APPROVED BY: M. JONES

PROJECT ENGINEER: K. MWANGI

PROJECT MANAGER: P. OTIENO

CONSULTANT'S REF: GC/NMR/2023/001

CONTRACT NO: KR/DD/2023/045

DRAWING STATUS: FOR CONSTRUCTION

ISSUE: 01

REVISION: 01

DATE: 2023-10-15

DESCRIPTION: FOR CONSTRUCTION

CHECKED: A. SMITH

APPROVED: M. JONES

C. OF DRAINAGE STATION
CH 12767

CH: 3+000m

CH: 4+000m

CH: 5+000m

CH: 6+000m

CH: 7+000m

CH: 8+000m

CH: 9+000m

CH: 10+000m

CH: 11+000m

CH: 12+000m

CH: 13+000m

CH: 14+000m

CH: 15+000m

CH: 16+000m

CH: 17+000m

CH: 18+000m

CH: 19+000m

CH: 20+000m

CH: 21+000m

CH: 22+000m

CH: 23+000m

CH: 24+000m

CH: 25+000m

CH: 26+000m

CH: 27+000m

CH: 28+000m

CH: 29+000m

CH: 30+000m

CH: 31+000m

CH: 32+000m

CH: 33+000m

CH: 34+000m

CH: 35+000m

CH: 36+000m

CH: 37+000m

CH: 38+000m

CH: 39+000m

CH: 40+000m

CH: 41+000m

CH: 42+000m

CH: 43+000m

CH: 44+000m

CH: 45+000m

CH: 46+000m

CH: 47+000m

CH: 48+000m

CH: 49+000m

CH: 50+000m

CH: 51+000m

CH: 52+000m

CH: 53+000m

CH: 54+000m

CH: 55+000m

CH: 56+000m

CH: 57+000m

CH: 58+000m

CH: 59+000m

CH: 60+000m

CH: 61+000m

CH: 62+000m

CH: 63+000m

CH: 64+000m

CH: 65+000m

CH: 66+000m

CH: 67+000m

CH: 68+000m

CH: 69+000m

CH: 70+000m

CH: 71+000m

CH: 72+000m

CH: 73+000m

CH: 74+000m

CH: 75+000m

CH: 76+000m

CH: 77+000m

CH: 78+000m

CH: 79+000m

CH: 80+000m

CH: 81+000m

CH: 82+000m

CH: 83+000m

CH: 84+000m

CH: 85+000m

CH: 86+000m

CH: 87+000m

CH: 88+000m

CH: 89+000m

CH: 90+000m

CH: 91+000m

CH: 92+000m

CH: 93+000m

CH: 94+000m

CH: 95+000m

CH: 96+000m

CH: 97+000m

CH: 98+000m

CH: 99+000m

CH: 100+000m

CH: 101+000m

CH: 102+000m

CH: 103+000m

CH: 104+000m

CH: 105+000m

CH: 106+000m

CH: 107+000m

CH: 108+000m

CH: 109+000m

CH: 110+000m

CH: 111+000m

CH: 112+000m

CH: 113+000m

CH: 114+000m

CH: 115+000m

CH: 116+000m

CH: 117+000m

CH: 118+000m

CH: 119+000m

CH: 120+000m

CH: 121+000m

CH: 122+000m

CH: 123+000m

CH: 124+000m

CH: 125+000m

CH: 126+000m

CH: 127+000m

CH: 128+000m

CH: 129+000m

CH: 130+000m

CH: 131+000m

CH: 132+000m

CH: 133+000m

CH: 134+000m

CH: 135+000m

CH: 136+000m

CH: 137+000m

CH: 138+000m

CH: 139+000m

CH: 140+000m

CH: 141+000m

CH: 142+000m

CH: 143+000m

CH: 144+000m

CH: 145+000m

CH: 146+000m

CH: 147+000m

CH: 148+000m

CH: 149+000m

CH: 150+000m

CH: 151+000m

CH: 152+000m

CH: 153+000m

CH: 154+000m

CH: 155+000m

CH: 156+000m

CH: 157+000m

CH: 158+000m

CH: 159+000m

CH: 160+000m

CH: 161+000m

CH: 162+000m

CH: 163+000m

CH: 164+000m

CH: 165+000m

CH: 166+000m

CH: 167+000m

CH: 168+000m

CH: 169+000m

CH: 170+000m

CH: 171+000m

CH: 172+000m

CH: 173+000m

CH: 174+000m

CH: 175+000m

CH: 176+000m

CH: 177+000m

CH: 178+000m

CH: 179+000m

CH: 180+000m

CH: 181+000m

CH: 182+000m

CH: 183+000m

CH: 184+000m

CH: 185+000m

CH: 186+000m

CH: 187+000m

CH: 188+000m

CH: 189+000m

CH: 190+000m

CH: 191+000m

CH: 192+000m

CH: 193+000m

CH: 194+000m

CH: 195+000m

CH: 196+000m

CH: 197+000m

CH: 198+000m

CH: 199+000m

CH: 200+000m

CH: 201+000m

CH: 202+000m

CH: 203+000m

CH: 204+000m

CH: 205+000m

CH: 206+000m

CH: 207+000m

CH: 208+000m

CH: 209+000m

CH: 210+000m

CH: 211+000m

CH: 212+000m

CH: 213+000m

CH: 214+000m

CH: 215+000m

CH: 216+000m

CH: 217+000m

CH: 218+000m

CH: 219+000m

CH: 220+000m

CH: 221+000m

CH: 222+000m

CH: 223+000m

CH: 224+000m

CH: 225+000m

CH: 226+000m

CH: 227+000m

CH: 228+000m

CH: 229+000m

CH: 230+000m

CH: 231+000m

CH: 232+000m

CH: 233+000m

CH: 234+000m

CH: 235+000m

CH: 236+000m

CH: 237+000m

CH: 238+000m

CH: 239+000m

CH: 240+000m

CH: 241+000m

CH: 242+000m

CH: 243+000m

CH: 244+000m

CH: 245+000m

CH: 246+000m

CH: 247+000m

CH: 248+000m

CH: 249+000m

CH: 250+000m

CH: 251+000m

CH: 252+000m

CH: 253+000m

CH: 254+000m

CH: 255+000m

CH: 256+000m

CH: 257+000m

CH: 258+000m

CH: 259+000m

CH: 260+000m

CH: 261+000m

CH: 262+000m

CH: 263+000m

CH: 264+000m

CH: 265+000m

CH: 266+000m

CH: 267+000m

CH: 268+000m

CH: 269+000m

CH: 270+000m

CH: 271+000m

CH: 272+000m

CH: 273+000m

CH: 274+000m

CH: 275+000m

CH: 276+000m

CH: 277+000m

CH: 278+000m

CH: 279+000m

CH: 280+000m

CH: 281+000m

CH: 282+000m

CH: 283+000m

CH: 284+000m

CH: 285+000m

CH: 286+000m

CH: 287+000m

CH: 288+000m

CH: 289+000m

CH: 290+000m

CH: 291+000m

CH: 292+000m

CH: 293+000m

CH: 294+000m

CH: 295+000m

CH: 296+000m

CH: 297+000m

CH: 298+000m

CH: 299+000m

CH: 300+000m

CH: 301+000m

CH: 302+000m

CH: 303+000m

CH: 304+000m

CH: 305+000m

CH: 306+000m

CH: 307+000m

CH: 308+000m

CH: 309+000m

CH: 310+000m

CH: 311+000m

CH: 312+000m

CH: 313+000m

CH: 314+000m

CH: 315+000m

CH: 316+000m

CH: 317+000m

CH: 318+000m

CH: 319+000m

CH: 320+000m

CH: 321+000m

CH: 322+000m

CH: 323+000m

CH: 324+000m

CH: 325+000m

CH: 326+000m

CH: 327+000m

CH: 328+000m

CH: 329+000m

CH: 330+000m

CH: 331+000m

CH: 332+000m

CH: 333+000m

CH: 334+000m

CH: 335+000m

CH: 336+000m

CH: 337+000m

CH: 338+000m

CH: 339+000m

CH: 340+000m

CH: 341+000m

CH: 342+000m

CH: 343+000m

CH: 344+000m

CH: 345+000m

CH: 346+000m

CH: 347+000m

CH: 348+000m

CH: 349+000m

CH: 350+000m

CH: 351+000m

CH: 352+000m

CH: 353+000m

CH: 354+000m

CH: 355+000m

CH: 356+000m

CH: 357+000m

CH: 358+000m

CH: 359+000m

CH: 360+000m

CH: 361+000m

CH: 362+000m

CH: 363+000m

CH: 364+000m

CH: 365+000m

CH: 366+000m

CH: 367+000m

CH: 368+000m

CH: 369+000m

CH: 370+000m

CH: 371+000m

CH: 372+000m

CH: 373+000m

CH: 374+000m

CH: 375+000m

CH: 376+000m

CH: 377+000m

CH: 378+000m

CH: 379+000m

CH: 380+000m

CH: 381+000m

CH: 382+000m

CH: 383+000m

CH: 384+000m

CH: 385+000m

CH: 386+000m

CH: 387+000m

CH: 388+000m

CH: 389+000m

CH: 390+000m

CH: 391+000m

CH: 392+000m

CH: 393+000m

CH: 394+000m

CH: 395+000m

CH: 396+000m

CH: 397+000m

CH: 398+000m

CH: 399+000m

CH: 400+000m

CH: 401+000m

CH: 402+000m

CH: 403+000m

CH: 404+000m

CH: 405+000m

CH: 406+000m

CH: 407+000m

CH: 408+000m

CH: 409+000m

CH: 410+000m

CH: 411+000m

CH: 412+000m

CH: 413+000m

CH: 414+000m

CH: 415+000m

CH: 416+000m

CH: 417+000m

CH: 418+000m

CH: 419+000m

CH: 420+000m

CH: 421+000m

CH: 422+000m

CH: 423+000m

CH: 424+000m

CH: 425+000m

CH: 426+000m

CH: 427+000m

CH: 428+000m

CH: 429+000m

CH: 430+000m

CH: 431+000m

CH: 432+000m

CH: 433+000m

CH: 434+000m

CH: 435+000m

CH: 436+000m

CH: 437+000m

CH: 438+000m

CH: 439+000m

CH: 440+000m

CH: 441+000m

CH: 442+000m

CH: 443+000m

CH: 444+000m

CH: 445+000m

CH: 446+000m

CH: 447+000m

CH: 448+000m

CH: 449+000m

CH: 450+000m

CH: 451+000m

CH: 452+000m

CH: 453+000m

CH: 454+000m

CH: 455+000m

CH: 456+000m

CH: 457+000m

CH: 458+000m

CH: 459+000m

CH: 460+000m

CH: 461+000m

CH: 462+000m

CH: 463+000m

CH: 464+000m

CH: 465+000m

CH: 466+000m

CH: 467+000m

CH: 468+000m

CH: 469+000m

CH: 470+000m

CH: 471+000m

CH: 472+000m

CH: 473+000m

CH: 474+000m

CH: 475+000m

CH: 476+000m

CH: 477+000m

CH: 478+000m

CH: 479+000m

CH: 480+000m

CH: 481+000m

CH: 482+000m

CH: 483+000m

CH: 484+000m

CH: 485+000m

CH: 486+000m

CH: 487+000m

CH: 488+000m

CH: 489+000m

CH: 490+000m

CH: 491+000m

CH: 492+000m

CH: 493+000m

CH: 494+000m

CH: 495+000m

CH: 496+000m

CH: 497+000m

CH: 498+000m

CH: 499+000m

CH: 500+000m

CH: 501+000m

CH: 502+000m

CH: 503+000m

CH: 504+000m

CH: 505+000m

CH: 506+000m

CH: 507+000m

CH: 508+000m

CH: 509+000m

CH: 510+000m

CH: 511+000m

CH: 512+000m

CH: 513+000m

CH: 514+000m

CH: 515+000m

CH: 516+000m

CH: 517+000m

CH: 518+000m

CH: 519+000m

CH: 520+000m

CH: 521+000m

CH: 522+000m

CH: 523+000m

CH: 524+000m

CH: 525+000m

CH: 526+000m

CH: 527+000m

CH: 528+000m

CH: 529+000m

CH: 530+000m

CH: 531+000m

CH: 532+000m

CH: 533+000m

CH: 534+000m

CH: 535+000m

CH: 536+000m

CH: 537+000m

CH: 538+000m

CH: 539+000m

CH: 540+000m

CH: 541+000m

CH: 542+000m

CH: 543+000m

CH: 544+000m

CH: 545+000m

CH: 546+000m

CH: 547+000m

CH: 548+000m

CH: 549+000m

CH: 550+000m

CH: 551+000m

CH: 552+000m

CH: 553+000m

CH: 554+000m

CH: 555+000m

CH: 556+000m

CH: 557+000m

CH: 558+000m

CH: 559+000m

CH: 560+000m

CH: 561+000m

CH: 562+000m

CH: 563+000m

CH: 564+000m

CH: 565+000m

CH: 566+000m

CH: 567+000m

CH: 568+000m

CH: 569+000m

CH: 570+000m

CH: 571+000m

CH: 572+000m

CH: 573+000m

CH: 574+000m

CH: 575+000m

CH: 576+000m

CH: 577+000m

CH: 578+000m

CH: 579+000m

CH: 580+000m

CH: 581+000m

CH: 582+000m

CH: 583+000m

CH: 584+000m

CH: 585+000m

CH: 586+000m

CH: 587+000m

CH: 588+000m

CH: 589+000m

CH: 590+000m

CH: 591+000m

CH: 592+000m

CH: 593+000m

CH: 594+000m

CH: 595+000m

CH: 596+000m

CH: 597+000m

CH: 598+000m

CH: 599+000m

CH: 600+000m

CH: 601+000m

CH: 602+000m

CH: 603+000m

CH: 604+000m

CH: 605+000m

CH: 606+000m

CH: 607+000m

CH: 608+000m

CH: 609+000m

CH: 610+000m

CH: 611+000m

CH: 612+000m

CH: 613+000m

CH: 614+000m

CH: 615+000m

CH: 616+000m

CH: 617+000m

CH: 618+000m

CH: 619+000m

CH: 620+000m

CH: 621+000m

CH: 622+000m

CH: 623+000m

CH: 624+000m

CH: 625+000m

CH: 626+000m

CH: 627+000m

CH: 628+000m

CH: 629+000m

CH: 630+000m

CH: 631+000m

CH: 632+000m

CH: 633+000m

CH: 634+000m

CH: 635+000m

CH: 636+000m

CH: 637+000m

CH: 638+000m

CH: 639+000m

CH: 640+000m

CH: 641+000m

CH: 642+000m

CH: 643+000m

CH: 644+000m

CH: 645+000m

CH: 646+000m

CH: 647+000m

CH: 648+000m

CH: 649+000m

CH: 650+000m

CH: 651+000m

CH: 652+000m

CH: 653+000m

CH: 654+000m

CH: 655+000m

CH: 656+000m

CH: 657+000m

CH: 658+000m

CH: 659+000m

CH: 660+000m

CH: 661+000m

CH: 662+000m

CH: 663+000m

CH: 664+000m

CH: 665+000m

CH: 666+000m

CH: 667+000m

CH: 668+000m

CH: 669+000m

CH: 670+000m

CH: 671+000m

CH: 672+000m

CH: 673+000m

CH: 674+000m

CH: 675+000m

CH: 676+000m

CH: 677+000m

CH: 678+000m

CH: 679+000m

CH: 680+000m

CH: 681+000m

CH: 682+000m

CH: 683+000m

CH: 684+000m

CH: 685+000m

CH: 686+000m

CH: 687+000m

CH: 688+000m

CH: 689+000m

CH: 690+000m

CH: 691+000m

CH: 692+000m

CH: 693+000m

CH: 694+000m

CH: 695+000m

CH: 696+000m

CH: 697+000m

CH: 698+000m

CH: 699+000m

CH: 700+000m

CH: 701+000m

CH: 702+000m

CH: 703+000m

CH: 704+000m

CH: 705+000m

CH: 706+000m

CH: 707+000m

CH: 708+000m

CH: 709+000m

CH: 710+000m

CH: 711+000m

CH: 712+000m

CH: 713+000m

CH: 714+000m

CH: 715+000m

CH: 716+000m

CH: 717+000m

CH: 718+000m

CH: 719+000m

CH: 720+000m

CH: 721+000m

CH: 722+000m

CH: 723+000m

CH: 724+000m

CH: 725+000m

CH: 726+000m

CH: 727+000m

CH: 728+000m

CH: 729+000m

CH: 730+000m

CH: 731+000m

CH: 732+000m

CH: 733+000m

CH: 734+000m

CH: 735+000m

CH: 736+000m

CH: 737+000m

CH: 738+000m

CH: 739+000m

CH: 740+000m

CH: 741+000m

CH: 742+000m

CH: 743+000m

CH: 744+000m

CH: 745+000m

CH: 746+000m

CH: 747+000m

CH: 748+000m

CH: 749+000m

CH: 750+000m

CH: 751+000m

CH: 752+000m

CH: 753+000m

CH: 754+000m

CH: 755+000m

CH: 756+000m

CH: 757+000m

CH: 758+000m

CH: 759+000m

CH: 760+000m

CH: 761+000m

CH: 762+000m

CH: 763+000m

CH: 764+000m

CH: 765+000m

CH: 766+000m

CH: 767+000m

CH: 768+000m

CH: 769+000m

CH: 770+000m

CH: 771+000m

CH: 772+000m

CH: 773+000m

CH: 774+000m

CH: 775+000m

CH: 776+000m

CH: 777+000m

CH: 778+000m

CH: 779+000m

CH: 780+000m

CH: 781+000m

CH: 782+000m

CH: 783+000m

CH: 784+000m

CH: 785+000m

CH: 786+000m

CH: 787+000m

CH: 788+000m

CH: 789+000m

CH: 790+000m

CH: 791+000m

CH: 792+000m

CH: 793+000m

CH: 794+000m

CH: 795+000m

CH: 796+000m

CH: 797+000m

CH: 798+000m

CH: 799+000m

CH: 800+000m

CH: 801+000m

CH: 802+000m

CH: 803+000m

CH: 804+000m

CH: 805+000m

CH: 806+000m

CH: 807+000m

CH: 808+000m

CH: 809+000m

CH: 810+000m

CH: 811+000m

CH: 812+000m

CH: 813+000m

CH: 814+000m

CH: 815+000m

CH: 816+000m

CH: 817+000m

CH: 818+000m

CH: 819+000m

CH: 820+000m

CH: 821+000m

CH: 822+000m

CH: 823+000m

CH: 824+000m

CH: 825+000m

CH: 826+000m

CH: 827+000m

CH: 828+000m

CH: 829+000m

CH: 830+000m

CH: 831+000m

CH: 832+000m

CH: 833+000m

CH: 834+000m

CH: 835+000m

CH: 836+000m

CH: 837+000m

CH: 838+000m

CH: 839+000m

CH: 840+000m

CH: 841+000m

CH: 842+000m

CH: 843+000m

CH: 844+000m

CH: 845+000m

CH: 846+000m

CH: 847+000m

CH: 848+000m

CH: 849+000m

CH: 850+000m

CH: 851+000m

CH: 852+000m

CH: 853+000m

CH: 854+000m

CH: 855+000m

CH: 856+000m

CH: 857+000m

CH: 858+000m

CH: 859+000m

CH: 860+000m

CH: 861+000m

CH: 862+000m

CH: 863+000m

CH: 864+000m

CH: 865+000m

CH: 866+000m

CH: 867+000m

CH: 868+000m

CH: 869+000m

CH: 870+000m

CH: 871+000m

CH: 872+000m

CH: 873+000m

CH: 874+000m

CH: 875+000m

CH: 876+000m

CH: 877+000m

CH: 878+000m

CH: 879+000m

CH: 880+000m

CH: 881+000m

CH: 882+000m

CH: 883+000m

CH: 884+000m

CH: 885+000m

CH: 886+000m

CH: 887+000m

CH: 888+000m

CH: 889+000m

CH: 890+000m

CH: 891+000m

CH: 892+000m

CH: 893+000m

CH: 894+000m

CH: 895+000m

CH: 896+000m

CH: 897+000m

CH: 898+000m

CH: 899+000m

CH: 900+000m

CH: 901+000m

CH: 902+000m

CH: 903+000m

CH: 904+000m

CH: 905+000m

CH: 906+000m

CH: 907+000m

CH: 908+000m

CH: 909+000m

CH: 910+000m

CH: 911+000m

CH: 912+000m

CH: 913+000m

CH: 914+000m

CH: 915+000m

CH: 916+000m

CH: 917+000m

CH: 918+000m

CH: 919+000m

CH: 920+000m

CH: 921+000m

CH: 922+000m

CH: 923+000m

CH: 924+000m

CH: 925+000m

CH: 926+000m

CH: 927+000m

CH: 928+000m

CH: 929+000m

CH: 930+000m

CH: 931+000m

CH: 932+000m

CH: 933+000m

CH: 934+000m

CH: 935+000m

CH: 936+000m

CH: 937+000m

CH: 938+000m

CH: 939+000m

CH: 940+000m

CH: 941+000m

CH: 942+000m

CH: 943+000m

CH: 944+000m

CH: 945+000m

CH: 946+000m

CH: 947+000m

CH: 948+000m

CH: 949+000m

CH: 950+000m

CH: 951+000m

CH: 952+000m

CH: 953+000m

CH: 954+000m

CH: 955+000m

CH: 956+000m

CH: 957+000m

CH: 958+000m

CH: 959+000m

CH: 960+000m

CH: 961+000m

CH: 962+000m

CH: 963+000m

CH: 964+000m

CH: 965+000m

CH: 966+000m

CH: 967+000m

CH: 968+000m

CH: 969+000m

CH: 970+000m

CH: 971+000m

CH: 972+000m

CH: 973+000m

CH: 974+000m

CH: 975+000m

CH: 976+000m

CH: 977+000m

CH: 978+000m

CH: 979+000m

CH: 980+000m

CH: 981+000m

CH: 982+000m

CH: 983+000m

CH: 984+000m

CH: 985+000m

CH: 986+000m

CH: 987+000m

CH: 988+000m

CH: 989+000m

CH: 990+000m

CH: 991+000m

CH: 992+000m

CH: 993+000m

CH: 994+000m

CH: 995+000m

CH: 996+000m

CH: 997+000m

CH: 998+000m

CH: 999+000m

CH: 1000+000m

DHULAWAT
KMP EXPRESS WAY
PACHGAON BTN.
CHANDLA DUNGERWAS STATION
TOILET BLOCK
WAITING HALL
PUMP HOUSE
UNDERGROUND WATER TANK
APPROACH ROAD 7.5m WIDE
RETAINING WALL FOR ROAD
BUILDING
WELL
Pond/Bn
CHANDLA DUNGERWAS VILLAGE
PACHGAON VILLAGE
LEGEND
EXISTING RAILWAY TRACK
PROPOSED UP & DN LINE
DISMANTLING WORKS
PROPOSED DIVERSIONS
EXISTING ROAD
PROCHORD BOUNDARY
EXPRESSWAY BOUNDARY
HT LINE
ELECTRICAL LINE(LT)
STREAM / CANAL / DRAIN
WELL
POND
TPT & TPO : TANGENT POINT
R : RADIUS
CCL : CIRCULAR CURVE LENGTH
TL : TANGENT LENGTH
TCL : TRANSITION LENGTH
SE : SUPERELLEVATION
Δ : DEFLECTION ANGLE
CSR : CLEAR STANDING ROOM
SSP : SUB SECTIONING & PARALLING POST
RH : RIGHT HANDED
LH : LEFT HANDED
OM : 100 LMS MARK
RJ : STOCK RAIL JOINT
TB : TRAP BWITCH
DE : DEAD END
Rr : RESULTANT RADIUS
CT : CENTRE OF CURVE
RP : RELAY HUT
NOTE:
1. ALL CHAINAGES ARE TAKEN FROM C.L OF STATION BUILDING AS 0.00 M .
2. ALL CHAINAGES AND LEVELS ARE IN METRES
3. ALL RAIL LINE IPTS & CROSSINGS ARE TO BE LAID WITH 90 KG WITH 1 IN 12 THICK WEB SWITCH WITH WELDABLE CMS CROSSING
4. TRACK STRUCTURE OF ALL NEW / REPLACEMENT OF LINES SHALL BE OF 90 KG RAILS ON 60 KG PSC SLEEPERS AND WITH SLEEPER DENSITY 1540 NOS / KM. 1660 Nos/km ON LAST CURVE ON BOTH SIDE & FOR LOOP LINE 1540 Nos/km BALLAST CUSHION 250 MM.
5. MINIMUM PASSENGER AMENITIES ARE TO BE PROVIDED AND BASIC AMENITIES REQUIRED AS PER RLY. BOARD. NO(MS)/2012/PER RLY. SCHADULE 7 NO. RBE/LM/PERSRTC DTD 17/08/2012.
PROPOSED TRACK STRUCTURE (T3 BUT FOR 25T AXLE LOAD
I. FOR RAIL CORRIDOR: 160KM/hr Speed
* TRACK = BG/2 RAILS
* SLEEPER DENSITY : PSC SLEEPERS = 1660 No.S PER KM
* BALLAST CUSHION : 350mm
* ALL TURNOUTS ARE : 1 in 12 UNLESS OTHERWISE SPECIFIED
PROJECT:
HARYANA ORBITAL RAIL CORRIDOR
CONSTRUCTION, PLYING, TC WORKS* WITH DEDICATED DELHI AREA BY LAYING ADDITIONAL RAILWAY TRACKS ALONGSIDE OF EXISTING DELHI-MUMBAI RAILWAY TRACK
CLIENT:
HARYANA RAIL INFRASTRUCTURE DEVELOPMENT CORPORATION LIMITED
GENERAL CONSULTANT:
GENERAL CONSULTANT FOR HARYANA ORBITAL RAIL CORRIDOR
NTES Limited in consortium with SMEC India Limited Pty Ltd.
QC/HORC
HRIDC
NAME / DESIGNATION | SIGN | NAME / DESIGNATION | SIGN
CHAHATEV RAM PO SUDHIR AGRAWAL DPO/CIVIL
RAJIV RANJAN CPM WEST/ HRIDC
A.S. JANGIU SR/DELEGY.
DGM/CIVIL
STEPHEN MANDO SR/DELEGY.
AM/S&T
CONSULTANTS:
AARVEE ASSOCIATES
aarvee associates
architects engineers & consultants pvt.ltd.
CIN : U74210DL1982PTC013369 FAX : 26512799
E-mail : aarvee@vsnl.com Website : www.aarveeassociates.com
NEW DELHI - 110 065 (INDIA)
TITLE :
CONSEPTUAL ENGINEERING SCALE PLAN
CHANDLA DUNGERWAS STATION YARD
CH: 42808.168m FF PIRTHALA
ISSUED ON : 11.11.2022
RECEIVED ON : 30.09.2022
QC DRG NO. : QC-HRC-C-223-DRW-STN-ESP-CCUDL-A2
DRG NO. : AAR/CONSULTANCY/HRIDC/DESIGN/DRG/C-4
SHEET NO. 1
SCALE : 1:1000
ISSUED ON : 30.11.2218
REV ON : 30.11.2022

LEGEND
PROPOSED RAILWAY TRACK
PROPOSED UP & DN LINE
PROPOSED OVERBRIDGE
PROPOSED UNDERPASS
PROPOSED BOUNDARY
EXISTING RAILWAY TRACK
HT LINE
RIVER/NALLA/NALLI
STREAM / CANAL (DRAIN)
ROAD
POND
Rh - RH HANDED
LH - LEFT HANDED
FM - FOG MAN
TS - TAKOUT SWITCH
TL - TAKOUT LENGTH
AT - ADVANCE TRAFFIC
ES - EXPRESS LOOP
BT - BOOM TRAFFIC
SBP - SUB SECTION(S) & HALT/LAND PORT
Rh - RH CAT
Rh - RH CAT
NOTE
1. ALL CHAINAGES ARE THEN PHONG C.L. OF BHOGA BALONG AND ESTIMATED.
2. ALL DIMENSIONS ARE IN METRES UNLESS OTHERWISE STATED.
3. ALL PANELLINE (TTA & TPA/PANEL) ARE TO BE LAID WITH MIN 7.5 % THICK WEB SWITCH
4. TRACK STRUCTURE OF ALL NEW REPLACEMENT OF LARGE SPANS, BEOF HEAVY SOA & CHEVRON
5. ALL NEW TURNOUTS ON PSC SLEEPERS WITH 60 KG 1:12 (R-650) WITH 1 IN 8.5 SWITCH
6. ALL NEW TURNOUTS ON PSC SLEEPERS WITH 60 KG 1:12 (R-650) WITH 1 IN 8.5 SWITCH
7. ALL NEW TURNOUTS ON PSC SLEEPERS WITH 60 KG 1:12 (R-650) WITH 1 IN 8.5 SWITCH
PROPOSED TRACK CONFIGURATION AT EXISTING CHHATEY RAM SUKHPAL GORAKHPAL ROAD RAILWAY STATION
FOR FINAL CONNECTION TO DWARKA EXPRESSWAY
• TRACK 1 ROUTE PSC SLEEPERS + 1660 kg R1H1 Rail
• TRACK 2 ROUTE PSC SLEEPERS + 1660 kg R1H1 Rail
• BALLAST CUSHION : 350mm
• ALL TURNOUTS ARE 1 IN 12 PSC SLEEPERS OTHERWISE SPECIFIED
PROJECT
HARYANA ORBITAL RAIL CORRIDOR
DEDICATED FREIGHT CORRIDOR CORRIDOR
HARYANA RAIL INFRASTRUCTURE DEVELOPMENT CORPORATION LTD.
CLIENT
GENERAL CONSULTANT
GENERAL CONSULTANT FOR
HARYANA RAIL INFRASTRUCTURE DEVELOPMENT CORPORATION LTD.
RITES
SARC
GC/HRDC
NAME / DESIGNATION
SIGN
CHHATEY RAM
SUKHPAL GORAKHPAL
A.S. JANGRA
STATION SUPERVISOR
HRDC
NAME / DESIGNATION
SIGN
RAVI PANJAN
CHIEF MANAGER/HRDC
DOMKHAL
AM/SAT
No.
CONSULTANCY SERVICES FOR PREPARATION OF DETAILED PROJECT REPORT FOR RAIL CONNECTIVITY TO PROPOSED INTERMODAL TERMINAL AT DOMKHAL (HARYANA)
DRAWING TITLE
PROPOSED TRACK CONFIGURATION AT EXISTING CHHATEY RAM SUKHPAL GORAKHPAL ROAD RAILWAY STATION FOR FINAL CONNECTION TO DWARKA EXPRESSWAY
DRAWING No.
SC/HRDC/GC/RAIL/RESERVATION/001
REVISION
0
DATE
MAY 2021
DESIGNED
SARC
DRAWN
SARC
CHECKED
SARC
APPROVED
A.S. JANGRA
STATION SUPERVISOR
SARC
aarvee associates
ARCHITECTS ENGINEERS CONSULTANTS
Aarvee Associates Architects, Engineers & Consultants Pvt. Ltd.
Aarvee House, 9, Anoop Nagar, Adhartal, Jabalpur - 482 004 (M.P.) India
Tel. : +91 761 2676 100 Fax : +91 761 2676 200
E-mail : jbp@aarvee.net Website : www.aarvee.net
SCALE 1:500 HORIZONTAL & VERTICAL
SHEET 1 OF 1
DRAWING No. SC/HRDC/GC/RAIL/RESERVATION/001
REVISION 0

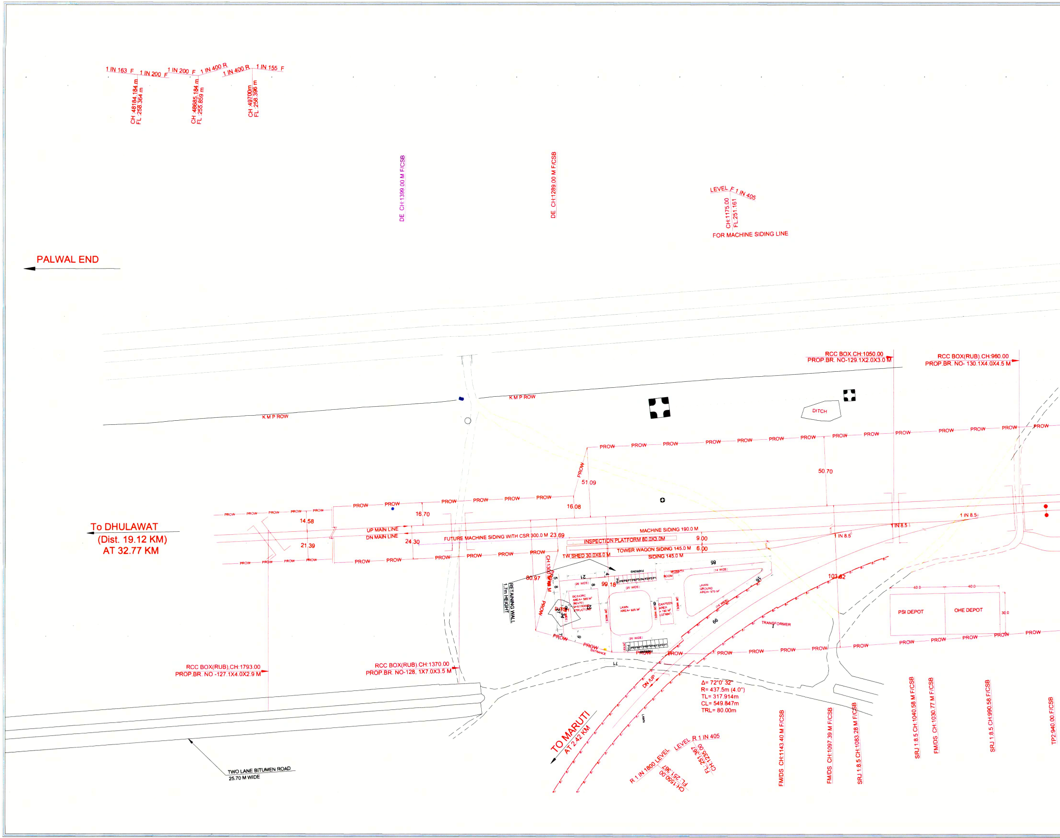
1 IN 163 F
1 IN 200 F
CH :48184.184 m
FL :258.364 m
1 IN 200 F
1 IN 400 R
CH :48685.184 m
FL :255.859 m
1 IN 400 R
1 IN 155 F
CH :49700m
FL :258.396 m
DE CH:1399.00 M F/CSB
DE CH:1289.00 M F/CSB
LEVEL F 1 IN 405
CH:1175.00
FL:251.161
FOR MACHINE SIDING LINE
PALWAL END
RCC BOX.CH:1050.00
PROP.BR. NO-129.1X2.0X3.0 M
RCC BOX(RUB).CH:960.00
PROP.BR. NO- 130.1X4.0X4.5 M
K M P ROW
DITCH
PROW
51.09
50.70
16.08
16.70
14.58
21.39
24.30
To DHULAWAT
(Dist. 19.12 KM)
AT 32.77 KM
UP MAIN LINE
DN MAIN LINE
FUTURE MACHINE SIDING WITH CSR 300.0 M 23.69
MACHINE SIDING 190.0 M
INSPECTION PLATFORM 80.0X3.0M
9.00
TOWER WAGON SIDING 145.0 M
6.00
TW SHED 30.0X6.0 M
SIDING 145.0 M
1 IN 8.5
1 IN 8.5
1 IN 8.5
CH:1300.00 M
80.97
RETAINING WALL
1.7m HEIGHT
99.18
PARKING
P10 P9 P8 P7 P6 P5 P4 P3 P2 P1
ROOM
WC/BATH
85
(14' WIDE)
(20' WIDE)
GC/HORC
AREA= 565 M²
(90'x70')
G+4 FRAME
STRUCTURE
DITCH
LAWN
AREA= 925 M²
CANTEEN
AREA
= 190 M²
(32'X64')
LAWN/
GROUND
AREA= 970 M²
ENTRANCE
TRANSFORMER
103.82
40.0
40.0
30.0
PSI DEPOT
OHE DEPOT
66
16
71
DN /UP
Δ= 72°0' 32"
R= 437.5m (4.0°)
TL= 317.914m
CL= 549.847m
TRL= 80.00m
LAWN
TO MARUTI
AT 2.42 KM
R 1 IN 1800 LEVEL
CH:1550.00
FL: 251.367
LEVEL R 1 IN 405
CH:1235.00
FL: 251.367
RCC BOX(RUB),CH:1793.00
PROP.BR. NO -127.1X4.0X2.9 M
RCC BOX(RUB).CH:1370.00
PROP.BR. NO-128, 1X7.0X3.5 M
TWO LANE BITUMEN ROAD
25.70 M WIDE
FM/DS CH:1143.40 M F/CSB
FM/DS CH:1097.39 M F/CSB
SRJ 1:8.5 CH:1083.28 M F/CSB
SRJ 1:8.5 CH:1040.58 M F/CSB
FM/DS CH:1030.77 M F/CSB
SRJ 1:8.5 CH:990.58 F/CSB
TP2:940.00 F/CSB

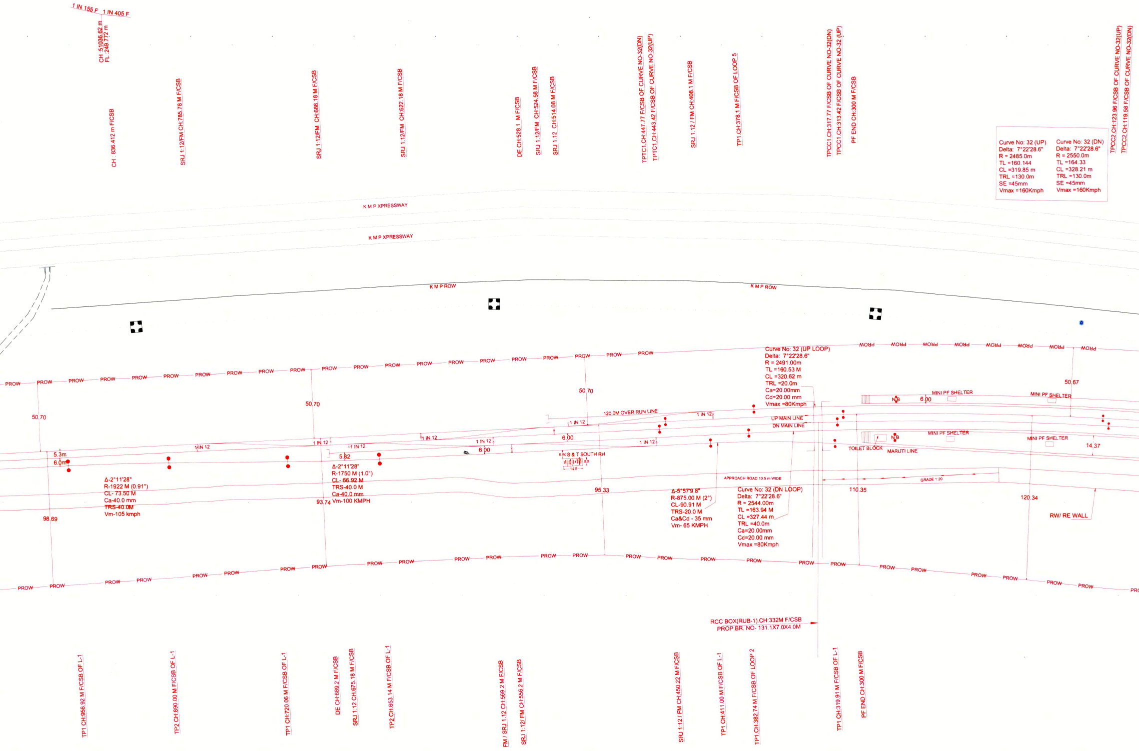
1 IN 155 F
1 IN 405 F
CH :51036.62 m
FL :249.772 m
CH : 836.412 m F/CSB
SRJ 1:12/FM CH:785.78 M F/CSB
SRJ 1:12/FM CH:688.18 M F/CSB
SRJ 1:12/FM CH:622.18 M F/CSB
DE CH:528.1 M F/CSB
SRJ 1:12/FM CH:524.58 M F/CSB
SRJ 1:12 CH:514.08 M F/CSB
TPTC1,CH:447.77 F/CSB OF CURVE NO-32(DN)
TPTC1 CH:443.42 F/CSB OF CURVE NO-32(UP)
SRJ 1:12 / FM CH:408.1 M F/CSB
TP1 CH:378.1 M F/CSB OF LOOP 5
TPCC1,CH:317.77 F/CSB OF CURVE NO-32(DN)
TPCC1,CH:313.42 F/CSB OF CURVE NO-32 (UP)
PF END CH:300 M F/CSB
Curve No: 32 (UP)
Delta: 7°22'28.6"
R = 2485.0m
TL =160.144
CL =319.85 m
TRL =130.0m
SE =45mm
Vmax =160Kmph
Curve No: 32 (DN)
Delta: 7°22'28.6"
R = 2550.0m
TL =164.33
CL =328.21 m
TRL =130.0m
SE =45mm
Vmax =160Kmph
TPCC2,CH:123.96 F/CSB OF CURVE NO-32(UP)
TPCC2,CH:119.58 F/CSB OF CURVE NO-32(DN)
K M P XPRESSWAY
K M P XPRESSWAY
K M P ROW
K M P ROW
PROW
50.70
50.70
50.70
50.67
Curve No: 32 (UP LOOP)
Delta: 7°22'28.6"
R = 2491.00m
TL =160.53 M
CL =320.62 m
TRL =20.0m
Ca=20.00mm
Cd=20.00 mm
Vmax =80Kmph
120.0M OVER RUN LINE
1 IN 12
UP MAIN LINE
DN MAIN LINE
MINI PF SHELTER
MINI PF SHELTER
MINI PF SHELTER
MINI PF SHELTER
NB
NB
6.00
6.00
6.00
TOILET BLOCK
MARUTI LINE
14.37
5.3m
6.0m
5.82
S & T SOUTH RH
6.50
5.5
14.5
Δ-2°11'28"
R-1922 M (0.91°)
CL- 73.50 M
Ca-40.0 mm
TRS-40.0M
Vm-105 kmph
Δ-2°11'28"
R-1750 M (1.0°)
CL- 66.92 M
TRS-40.0 M
Ca-40.0 mm
Vm-100 KMPH
98.69
93.74
95.33
APPROACH ROAD 10.5 m WIDE
GRADE 1:20
Δ-5°57'9.8"
R-875.00 M (2°)
CL-90.91 M
TRS-20.0 M
Ca&Cd - 35 mm
Vm- 65 KMPH
Curve No: 32 (DN LOOP)
Delta: 7°22'28.6"
R = 2544.00m
TL =163.94 M
CL =327.44 m
TRL =40.0m
Ca=20.00mm
Cd=20.00 mm
Vmax =80Kmph
110.35
120.34
RW/ RE WALL
RCC BOX(RUB-1) CH:332M F/CSB
PROP BR. NO- 131 1X7.0X4.0M
TP1 CH:956.92 M F/CSB OF L-1
TP2 CH:890.00 M F/CSB OF L-1
TP1 CH:720.06 M F/CSB OF L-1
DE CH:689.2 M F/CSB
SRJ 1:12 CH:675.18 M F/CSB
TP2 CH:653.14 M F/CSB OF L-1
FM / SRJ 1:12 CH:569.2 M F/CSB
SRJ 1:12/ FM CH:556.2 M F/CSB
SRJ 1:12 / FM CH:450.22 M F/CSB
TP1 CH:411.00 M F/CSB OF L-1
TP1 CH:382.74 M F/CSB OF LOOP 2
TP1 CH:319.91 M F/CSB OF L-1
PF END CH:300 M F/CSB

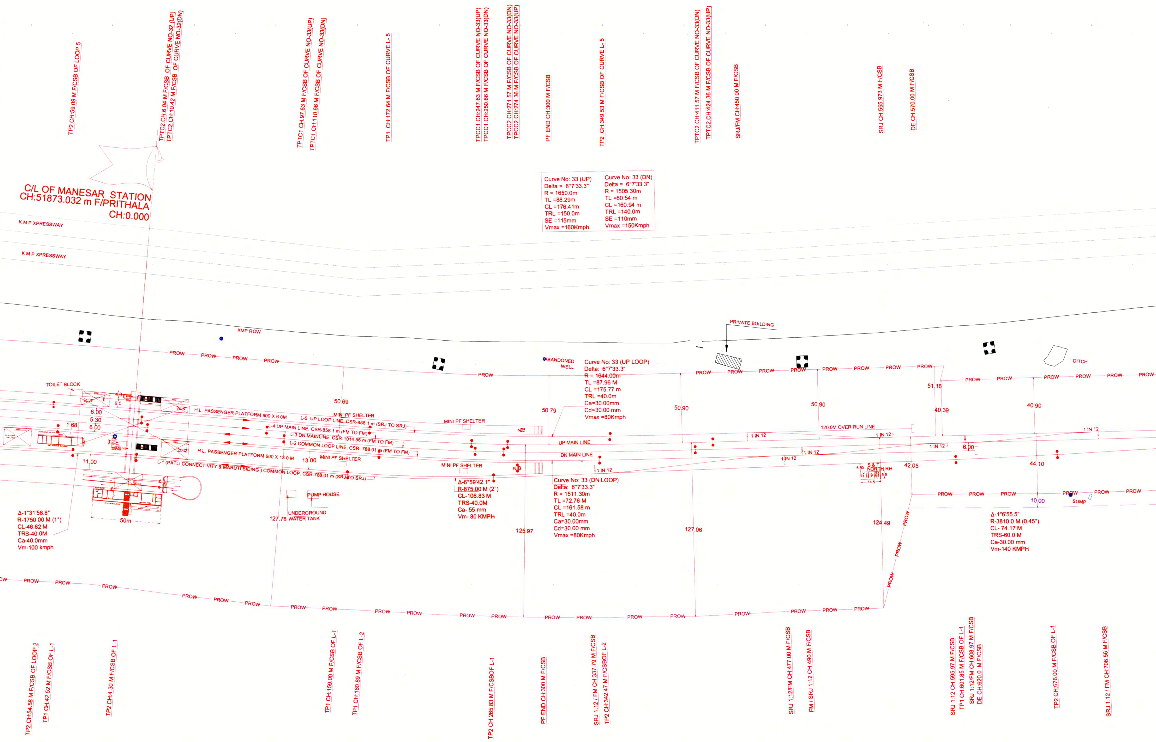
TP2.CH:59.09 M F/CSB OF LOOP 5
TPTC2.CH:6.04 M F/CSB OF CURVE NO-32 (UP)
TPTC2.CH:10.42 M F/CSB OF CURVE NO-32(DN)
TPTC1.CH:97.63 M F/CSB OF CURVE NO-33(UP)
TPTC1.CH:110.66 M F/CSB OF CURVE NO-33(DN)
TP1 .CH:172.64 M F/CSB OF CURVE L- 5
TPCC1.CH:247.63 M F/CSB OF CURVE NO-33(UP)
TPCC1.CH:250.66 M F/CSB OF CURVE NO-33(DN)
TPCC2.CH:271.57 M F/CSB OF CURVE NO-33(DN)
TPCC2.CH:274.36 M F/CSB OF CURVE NO-33(UP)
PF END CH:300 M F/CSB
TP2 .CH:349.53 M F/CSB OF CURVE L- 5
TPTC2.CH:411.57 M F/CSB OF CURVE NO-33(DN)
TPTC2.CH:424.36 M F/CSB OF CURVE NO-33(UP)
SRJ/FM CH:450.00 M F/CSB
SRJ CH:555.973 M F/CSB
DE CH:570.00 M F/CSB
C/L OF MANESAR STATION
CH:51873.032 m F/PRITHALA
CH:0.000
Curve No: 33 (UP)
Delta = 6°7'33.3"
R = 1650.0m
TL =88.29m
CL =176.41m
TRL =150.0m
SE =115mm
Vmax =160Kmph
Curve No: 33 (DN)
Delta = 6°7'33.3"
R = 1505.30m
TL =80.54 m
CL =160.94 m
TRL =140.0m
SE =110mm
Vmax =150Kmph
K M P XPRESSWAY
K M P XPRESSWAY
KMP ROW
PRIVATE BUILDING
ABANDONED WELL
DITCH
PROW
PROW
PROW
PROW
PROW
PROW
PROW
PROW
PROW
PROW
PROW
PROW
PROW
PROW
PROW
PROW
PROW
PROW
Curve No: 33 (UP LOOP)
Delta: 6°7'33.3"
R = 1644.00m
TL =87.96 M
CL =175.77 m
TRL =40.0m
Ca=30.00mm
Cd=30.00 mm
Vmax =80Kmph
TOILET BLOCK
4.0
6.0
6.00
5.30
6.00
1.68
11.00
50.69
50.79
50.90
50.90
51.16
40.39
40.90
H.L. PASSENGER PLATFORM 600 X 6.0M
MINI PF SHELTER
L-5 UP LOOP LINE, CSR-858.1 m (SRJ TO SRJ)
L-4 UP MAIN LINE, CSR-858.1 m (FM TO FM)
L-3 DN MAINLINE, CSR-1014.56 m (FM TO FM)
L-2 COMMON LOOP LINE, CSR- 788.01 m (FM TO FM)
H.L. PASSENGER PLATFORM 600 X 13.0 M
13.00
MINI PF SHELTER
L-1 (PATLI CONNECTIVITY & MARUTI SIDING) COMMON LOOP, CSR-788.01 m (SRJ TO SRJ)
MINI PF SHELTER
NB
MINI PF SHELTER
NB
UP MAIN LINE
DN MAIN LINE
1 IN 12
120.0M OVER RUN LINE
1 IN 12
1 IN 12
1 IN 12
1 IN 12
1 IN 12
1 IN 12
1 IN 12
6.00
S & T
NORTH RH
6.50
5.5
14.5
42.05
44.10
10.00
SUMP
PUMP HOUSE
UNDERGROUND WATER TANK
127.78
50m
Δ-1°31'58.8"
R-1750.00 M (1°)
CL-46.82 M
TRS-40.0M
Ca-40.0mm
Vm-100 kmph
Δ-6°59'42.1"
R-875.00 M (2°)
CL-106.83 M
TRS-40.0M
Ca- 55 mm
Vm- 80 KMPH
Curve No: 33 (DN LOOP)
Delta: 6°7'33.3"
R = 1511.30m
TL =72.76 M
CL =161.58 m
TRL =40.0m
Ca=30.00mm
Cd=30.00 mm
Vmax =80Kmph
125.97
127.06
124.49
Δ-1°6'55.5"
R-3810.0 M (0.45°)
CL- 74.17 M
TRS-60.0 M
Ca-30.00 mm
Vm-140 KMPH
PROW
PROW
PROW
PROW
PROW
PROW
PROW
PROW
PROW
PROW
PROW
PROW
PROW
PROW
PROW
PROW
PROW
PROW
PROW
PROW
PROW
PROW
PROW
PROW
TP2.CH:54.58 M F/CSB OF LOOP 2
TP1 CH:42.52 M F/CSB OF L-1
TP2 CH:4.30 M F/CSB OF L-1
TP1 CH:159.00 M F/CSB OF L-1
TP1 CH:180.89 M F/CSB OF L-2
TP2 CH:265.83 M F/CSBOF L-1
PF END CH:300 M F/CSB
SRJ 1:12 / FM CH:337.79 M F/CSB
TP2 CH:342.47 M F/CSBOF L-2
SRJ 1:12/FM CH:477.00 M F/CSB
FM / SRJ 1:12 CH:490 M F/CSB
SRJ 1:12 CH:595.97 M F/CSB
TP1 CH:601.85 M F/CSB OF L-1
SRJ 1:12/FM CH:608.97 M F/CSB
DE CH:620.0 M F/CSB
TP2 CH:676.00 M F/CSB OF L-1
SRJ 1:12 / FM CH:706.56 M F/CSB

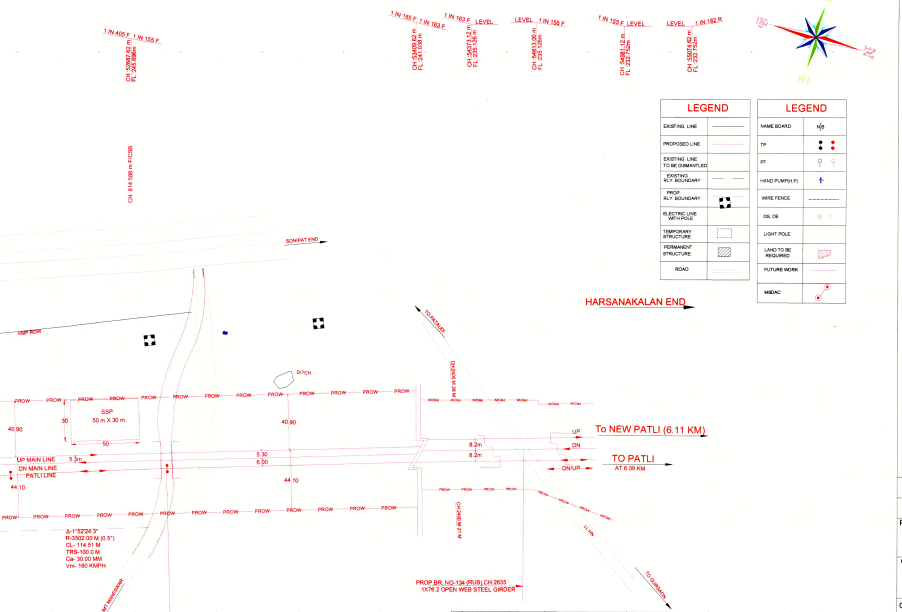
1 IN 405 F
1 IN 155 F
CH :52687.62 m
FL :245.696m
1 IN 155 F
1 IN 163 F
CH :53409.62 m
FL :241.038 m
1 IN 163 F
LEVEL
CH :54373.12 m
FL :235.126 m
LEVEL
1 IN 155 F
CH :54613.00 m
FL :235.126m
1 IN 155 F
LEVEL
CH :54981.12 m
FL :232.752m
LEVEL
1 IN 182 R
CH :55074.62 m
FL :232.752m
CH 814.588 m F/CSB
SONIPAT END
HARSANAKALAN END
KMP ROW
TO PATAUDI
DITCH
PROW
SSP
50 m X 30 m.
30
50
40.90
40.90
UP MAIN LINE
DN MAIN LINE
PATLI LINE
5.3m
5.30
6.00
44.10
44.10
8.2m
8.2m
UP
DN
DN/UP
To NEW PATLI (6.11 KM)
TO PATLI
AT 6.09 KM
CH:2400 M 28 M
CH:2400 M 21 M
NH 11
TO GURGAON
TO IMT MANESWAR
Δ-1°52'24.3"
R-3502.00 M (0.5°)
CL- 114.51 M
TRS-100.0 M
Ca- 30.00 MM
Vm- 160 KMPH
PROP.BR. NO-134 (RUB).CH:2635
1X76.2 OPEN WEB STEEL GIRDER

RCC BOX(RUB).CH:870M F/CSB
PROP.BR. NO-133. 2X5.0X6.0 M

TP1 CH:756.00 M F/CSB

TP2 CH:870.44 M F/CSB

NOTES :-

1. ALL CHAINAGES ARE TAKEN FROM C.L OF MANESAR STATION BUILDING AS 0.00 M .
2. ALL CHAINAGES AND LEVELS ARE IN METRES.
3. ALL MAIN LINE PTS & CROSSINGS ARE TO BE LAID WITH 60 Kg WITH 1 IN 12 THICK WEB SWITCH WITH WELDABLE CMS CROSSING.
4. TRACK STRUCTURE OF ALL NEW / REPLACEMENT OF LINES SHALL BE OF 60 KG RAILS ON 60 KG PSC SLEEPERS AND WITH SLEEPER DENSITY FOR MAIN LINE 1660 Nos/Km.BALLAST CUSHION 350 MM & FOR LOOP LINE 1540 Nos/Km.BALLAST CUSHION 250 MM.
5. PROVISION HAS BEEN MADE FOR EI/SSJ WITH STD. - IIIR DISTRIBUTED INTERLQCKING AND MACL SIGNALING SYSTEM. .
6. MINIMUM PASSENGER AMENITIES ARE TO BE PROVIDED WHEREVER REQUIRED AS PER RLY.BOARD. NORMS.(AS PER RLY. BOARD'S LT. NO: RB/L&A/005/2012. DTD:11/09/2012)

LEGEND

EXISTING LINE	—
PROPOSED LINE	—
EXISTING LINE TO BE DISMANTLED	—
EXISTING RLY. BOUNDARY	— —
PROP. RLY. BOUNDARY	—
ELECTRIC LINE WITH POLE	
TEMPORARY STRUCTURE	☐
PERMANENT STRUCTURE	▨
ROAD	—

LEGEND

NAME BOARD	NB
TP	● ●
PT	
HAND PUMP(H.P)	
WIRE FENCE	- - -
DS, DE	
LIGHT POLE	
LAND TO BE REQUIRED	▨
FUTURE WORK	—
MSDAC	

GC/HORC		HRIDC	
NAME / DESIGNATION	SIGN	NAME / DESIGNATION	SIGN
CHAHATEY RAM PD	Chahatey Ram 2/3/23	R. R. KUMAR GM/ IP&P	04/03/2023
SUDHIR AGRAWAL DPD/CIVIL	2/3	UMA.M.RAO DGM/C-W	04/03/2023
RAJENDRA KR. BHAUGUNA DPD/EST	02.03.2023.	AM/S&T	04/03/2023
KRISHAN CHAND SAINSI CRE/CIVIL			
AMARNATH SINGH CRE/S&T	Amarnath Singh 02-03-2023		
A.S. JANGHU CRE/ELECT.	02.03.2023		
STIPHEN SAHOO ARE/ELECT.	Stiphen 02.03.2023		

NORTHERN RAILWAY

DELHI DIVISION

PROJECT:

HARYANA ORBITAL RAIL CORRIDOR

CONNECTING PALWAL TO SONIPAT BYPASSING DELHI AREA BY LINKING ASAOTI-PATLI-SULTANPUR-ASAUDAH BY NEW ELECTRIFIED BG DOUBLE LINE

CLIENT:

HARYANA RAIL INFRASTRUCTURE DEVELOPMENT CORPORATION LIMITED.

GENERAL CONSULTANT:

GENERAL CONSULTANT FOR HARYANA ORBITAL RAIL CORRIDOR

RITES Limited in consortium with SMEC International Pty. Ltd.

RITES
THE INFRASTRUCTURE PEOPLE

SMEC

DRAWING NAME	ENGINEERING SCALE PLAN MANESAR STATION		
GC/HORC DRG. NO:-	GC-HRIDC-C1-DRW-STN-ESP-MAN01-A1		
ISSUE DATE:	05.04.2022	REVISED DATE: 30.01.2022	
SCALE	1:1000 1MM:1METRE		
SMC DRG. NO:-	HRIDC/PS/LP-1		
CONSULTANT:	S.M. CONSULTANTS An ISO 9001 Company Bhubaneswar / Balasore / Secunderabad / South Andaman / New Delhi Web : www.smcindia.com , E-Mail : support@smcindia.com		S. M. CONSULTANTS BHUBANESWAR A. A. SAMANT PROJECT INCHARGE
DRAWN BY:-	R.DAS	CHECKED BY:- A. A SAMANT	
RELEASED FOR	☐ PRELIMINARY FOR APPROVAL	☑ TENDER	☐ CONSTRUCTION

LEGEND
EXISTING ELECTRICITY TRACK
PROPOSED ELECTRICITY TRACK
EXISTING ROAD
PROPOSED ROAD
EXISTING FOOTPATH
PROPOSED FOOTPATH
EXISTING BUILDING
PROPOSED BUILDING
EXISTING TREE
PROPOSED TREE
NOTES
1. ALL DIMENSIONS ARE IN METRES UNLESS OTHERWISE STATED.
2. ALL LEVELS ARE IN METRES ABOVE MEAN SEA LEVEL.
3. ALL CHAINAGES AND OFFSETS ARE IN METRES.
4. THE CONTRACTOR SHALL VERIFY ALL DIMENSIONS AND LEVELS ON SITE BEFORE COMMENCING ANY WORK.
5. ANY DISCREPANCY SHALL BE REPORTED TO THE ENGINEER IMMEDIATELY.
6. THE CONTRACTOR SHALL NOT SCALE DIMENSIONS FROM THIS DRAWING.
7. ALL WORKS SHALL BE CARRIED OUT IN ACCORDANCE WITH THE SPECIFICATIONS.
8. THE CONTRACTOR SHALL PROVIDE ADEQUATE SAFETY MEASURES DURING CONSTRUCTION.
9. ALL EXISTING SERVICES SHALL BE PROTECTED AND MAINTAINED.
10. THE CONTRACTOR SHALL OBTAIN ALL NECESSARY PERMITS BEFORE COMMENCEMENT.
11. ALL MATERIALS SHALL BE APPROVED BY THE ENGINEER BEFORE USE.
12. THE CONTRACTOR SHALL MAINTAIN TRAFFIC DIVERSIONS AS DIRECTED.
13. ALL DRAINAGE SHALL BE CONSTRUCTED AS PER THE APPROVED DESIGN.
14. THE CONTRACTOR SHALL PROVIDE AS-BUILT DRAWINGS UPON COMPLETION.
15. ALL WORKS SHALL BE COMPLETED WITHIN THE CONTRACT PERIOD.
16. THE CONTRACTOR SHALL BE RESPONSIBLE FOR ANY DAMAGE CAUSED TO PUBLIC PROPERTY.
17. ALL CONCRETE SHALL BE OF GRADE C25 UNLESS OTHERWISE STATED.
18. REINFORCEMENT SHALL BE HIGH YIELD STEEL TO BS 4449.
19. THE CONTRACTOR SHALL PROVIDE ADEQUATE LIGHTING FOR NIGHT WORKS.
20. ALL WORKS SHALL BE SUBJECT TO FINAL INSPECTION AND APPROVAL.
PROPOSED TRACK ALIGNMENT DATA
1. TRACK GAUGE : 1435 mm
2. MAXIMUM GRADIENT : 1 IN 200
3. MINIMUM RADIUS OF CURVE : 1200 m
4. CANT : 150 mm
5. TRACK STRUCTURE : BALLASTED TRACK
6. RAIL SECTION : 60 kg/m
7. SLEEPER SPACING : 600 mm c/c
8. FASTENING : ELASTIC
9. DESIGN SPEED : 160 kmph
10. TRACK CLASS : CLASS 1
PROJECT : CONSTRUCTION OF DOUBLE LINE ELECTRIFIED RAILWAY LINE FROM KATPADI JUNCTION TO GUDIYATTAM
CLIENT : SOUTH CENTRAL RAILWAY
CONSULTANT : RAILWAY CONSTRUCTION ENGINEERS (I) PVT. LTD.
CONTRACTOR : GCHOMC - HROC
DRAWING TITLE : KM 0/0 TO KM 1/0 - PLAN
DRAWING NO. : RCE/SCR/KPD-GDR/PLAN/001
SCALE : 1:1000
DATE : 15.03.2024
REVISION : 00
SHEET NO. : 1 OF 1
RAILWAY STATION
ROAD OVER BRIDGE
LEVEL CROSSING GATE
KM 0/0
KM 1/0
PLATFORM
STATION BUILDING
WATER TANK
SIGNAL POST
TRACK CIRCUIT
POINT
CROSSING
BUFFER STOP
CATCH SIDING
MAIN LINE
LOOP LINE
SIDING
YARD
GOODS SHED
PASSENGER SHELTER
PARCEL OFFICE
GOODS PLATFORM
PASSENGER PLATFORM
FOOTBRIDGE
SUBWAY
CULVERT
BRIDGE
RETAINING WALL
BOUNDARY WALL
FENCE
HEDGE
TREE
ELECTRIC POLE
OVERHEAD WIRE
SUBSTATION
SWITCHING STATION
TRACTION MAST
CANTILEVER
PORTAL
MAST
WIRE
CATENARY
CONTACT WIRE
MESSENGER WIRE
DROPPER
STITCH WIRE
EARTH WIRE
FEEDER
RETURN CONDUCTOR
AUTO TRANSFORMER
BOOSTER TRANSFORMER
RAILWAY LINE
ROAD
RIVER
CANAL
POND
HILL
VALLEY
CULTIVATED LAND
FOREST
VILLAGE
TOWN
CITY
NORTH
SOUTH
EAST
WEST
N
S
E
W
KATPADI JUNCTION
GUDIYATTAM
KM 0/0
KM 1/0
PLATFORM 1
PLATFORM 2
STATION BUILDING
WATER TANK
SIGNAL POST
TRACK CIRCUIT
POINT
CROSSING
BUFFER STOP
CATCH SIDING
MAIN LINE
LOOP LINE
SIDING
YARD
GOODS SHED
PASSENGER SHELTER
PARCEL OFFICE
GOODS PLATFORM
PASSENGER PLATFORM
FOOTBRIDGE
SUBWAY
CULVERT
BRIDGE
RETAINING WALL
BOUNDARY WALL
FENCE
HEDGE
TREE
ELECTRIC POLE
OVERHEAD WIRE
SUBSTATION
SWITCHING STATION
TRACTION MAST
CANTILEVER
PORTAL
MAST
WIRE
CATENARY
CONTACT WIRE
MESSENGER WIRE
DROPPER
STITCH WIRE
EARTH WIRE
FEEDER
RETURN CONDUCTOR
AUTO TRANSFORMER
BOOSTER TRANSFORMER
RAILWAY LINE
ROAD
RIVER
CANAL
POND
HILL
VALLEY
CULTIVATED LAND
FOREST
VILLAGE
TOWN
CITY
NORTH
SOUTH
EAST
WEST
N
S
E
W
KATPADI JUNCTION
GUDIYATTAM
KM 0/0
KM 1/0
PLATFORM 1
PLATFORM 2
STATION BUILDING
WATER TANK
SIGNAL POST
TRACK CIRCUIT
POINT
CROSSING
BUFFER STOP
CATCH SIDING
MAIN LINE
LOOP LINE
SIDING
YARD
GOODS SHED
PASSENGER SHELTER
PARCEL OFFICE
GOODS PLATFORM
PASSENGER PLATFORM
FOOTBRIDGE
SUBWAY
CULVERT
BRIDGE
RETAINING WALL
BOUNDARY WALL
FENCE
HEDGE
TREE
ELECTRIC POLE
OVERHEAD WIRE
SUBSTATION
SWITCHING STATION
TRACTION MAST
CANTILEVER
PORTAL
MAST
WIRE
CATENARY
CONTACT WIRE
MESSENGER WIRE
DROPPER
STITCH WIRE
EARTH WIRE
FEEDER
RETURN CONDUCTOR
AUTO TRANSFORMER
BOOSTER TRANSFORMER
RAILWAY LINE
ROAD
RIVER
CANAL
POND
HILL
VALLEY
CULTIVATED LAND
FOREST
VILLAGE
TOWN
CITY
NORTH
SOUTH
EAST
WEST
N
S
E
W

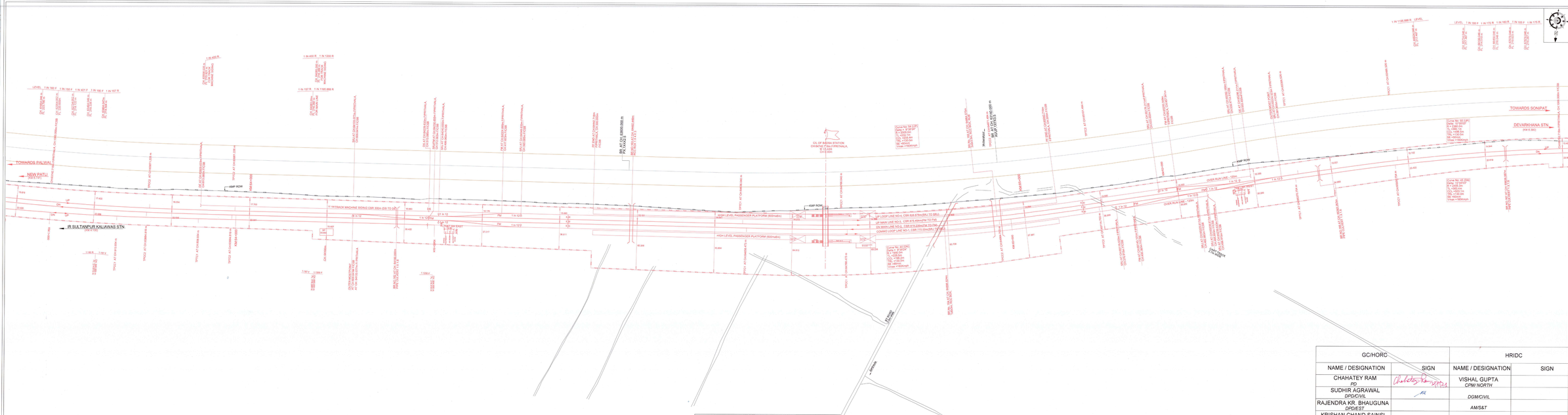
TOWARDS RAIWALI
NEW PATLI
TOWARDS SONIPAT
DEVARKHANA STN.
IR SULTANPUR KALAWAS STN.
KMP ROR
OVER RUN LINE - 100m
LEGEND:
EXISTING RAILWAY TRACK
PROPOSED UP & DN LINE
DISMANTLING WORKS
PROPOSED OVERBRIDGE
EXISTING ROAD
PRO HORC BOUNDARY
EXPRESSWAY BOUNDARY
HT LINE
ELECTRICAL LINE(LT)
STREAM / CANAL / DRAIN
WELL
POND
FIGBB:FROM CENTER LINE OF STN BLDG.
TBT & TTG - TANGENT POINT
R - RADIUS
CL - CIRCULAR CURVE LENGTH
TL - TRANSIENT LENGTH
TTR - TRANSITION LENGTH
SE - SUPERELEVATION
D - DEFLECTION ANGLE
CD - CHORD DEFLECTION ANGLE
EBP - ELIB ELECTRONIC & PANELLING POST
Rh/ - RIGHT HANDED
LH/ - LEFT HANDED
FIM - FOULING MARK
IRS/ - IRSE/ STOCK RAIL JOINT
TB - TRAP SWITCH
DE - DEAD END
RI - RESULTANT RADIUS
RC - RADIUS OF CURVE
Ro - RELIEF in ST
NOTES:
1. ALL DIMENSIONS ARE SHOWN IN METRES.
2. THIS IS IR REQUIRED AS CL OF STATION BUILDING
3. THROUGH CHAINAGES ARE RECKONED FROM CL OF PIRTHALA STATION.
4. ALL GAUGES/CANT FOR PIRTHALA TO HARSANA KALAN SECTION IS 1 IN 150 COMPENSATED.
5. SIGNALLING WORKS :- IXR DISTRIBUTED INTERLOCKING AND MACL SIGNALING SYSTEM SHALL BE PROVIDED.
6. ALL MAIN LINE POINTS & CROSSINGS ARE TO BE LAID WITH 60 Kg 1 IN 12 THICK RAILS ON WIDE SAME PRC SLEEPERS AT 65 PER KM.
TRACK STRUCTURE OF ALL NEW / REPLACEMENT OF LINES SHALL BE WITH 60 Kg RAILS ON WIDE SAME PRC SLEEPERS AT
SLEEPER DENSITY OF 1660 Nos/KM & BALLAST CUSHION 350 mm FOR MAIN LINE.
SLEEPER DENSITY OF 1540 Nos/KM & BALLAST CUSHION 250 MM FOR LOOP LINE
PROPOSED TRACK STRUCTURE ITO SUIT FOR 25T AXLE LOAD
* FOR RAIL CORRIDOR: 1800MPH (Speed
* RAILS: 60 KG UTS 90 R1
* SLEEPER DENSITY: PSC SLEEPERS = 1660 Nos.S PER KM
* BALLAST CUSHION : 350mm
* ALL TURNOUTS ARE : 1 in 12 UNLESS OTHERWISE SPECIFIED
CSR DETAILS FOR NEW BADSA YARD
LINE NO | LINE NOTATION | | | | TOTAL LENGTH OF CSR
LINE NO-1 | LOOP LINE 1 | SIG | 04540.033 | SIG | 03118.033 | 1710.0000
LINE NO-2 | DN MAIN LINE | FM | 04324.895 | FM | 03243.221 | 828.266
LINE NO-3 | UP MAIN LINE | FM | 04324.895 | FM | 03200.359 | 875.464
LINE NO-4 | LOOP LINE 2 | SIG | 04349.633 | SIG | 03179.211 | 826.578
GC/HORC | | HRIDC | |
NAME / DESIGNATION | SIGN | NAME / DESIGNATION | SIGN
CHAHATEY RAM PD | | VISHAL GUPTA CPM/ NORTH | |
SUDHIR AGRAWAL DPO/CIVIL | | DGM/CIVIL | |
RAJENDRA KR. BHAUGUNA DPO/EST. | | AM/S&T | |
KRISHAN CHAND SAINSI CRE/CIVIL | | | |
AMARNATH SINGH CRE/S&T | | | |
A.S. JANGHU CRE/ELECT. | | | |
PROJECT: HARYANA ORBITAL RAIL CORRIDOR
CONSULTANCY FOR PREPARATION OF DPR FOR 6 NOS. RRTS CORRIDORS AND 1 NO. MRTS CORRIDOR IN NCR
CLIENT: HARYANA RAIL INFRASTRUCTURE DEVELOPMENT CORPORATION LIMITED
GENERAL CONSULTANT: GENERAL CONSULTANT FOR HARYANA ORBITAL RAIL CORRIDOR
RITES Limited a subsidiary of IRSDC Infrastructure Pvt. Ltd.
TITLE: CONCEPTUAL ENGINEERING SCALE PLAN
BADSA JUNCTION STATION (CH:64740.718m FIRPITHALA
DC ORIG NO: HO-HRIDC-DC-CIV-ENGTN-PLAN-BDSJ-001
ISSUED ON: 29.06.2022
REV.NO/DT:
CONSULTANTS: AARVEE ASSOCIATES
aarvee associates
ARCHITECTS ENGINEERS & CONSULTANTS (P) LTD.
Aarvee Associates Architects Engineers & Consultants (P) Ltd.
Regd. Office: Aarvee House, Adjoining Archies Gallery, Opp. Rly. Station, Jubilee Hills, Hyderabad - 500 033, India. Ph: +91 40 2354 0151 Fax: +91 40 2354 0152 E-mail: aarvee@aarvee.net Website: www.aarvee.net
DESIGNED
DRAWN
CHECKED
TL/ INCHARGE
ORIGINAL MAPS / DOCUMENTS DC OR DRG NO.: -
SHEET NO.:
SCALE: 1:1000
SIG:03.06.22 DM:11.08.22
REV DT: 29.06.2022

LEGEND
ELECTRIC RAILWAY TRACK
DIAMOND CROSSING
EXISTING ROADS
EXISTING RAILWAY
PROPOSED RAILWAY
BOUNDARY
ELECTRICAL LINE(LT)
ELECTRICAL LINE(HT)
WELL
NOTES
1. ALL DIMENSIONS ARE SHOWN IN METRES.
2. ALL LEVELS SHOWN ARE WITH REFERENCE TO RAILWAY DATUM.
3. ALL CHAINAGES ARE WITH REFERENCE TO EXISTING RAILWAY STATION.
4. ALL DIMENSIONS & LEVELS ARE TO BE VERIFIED AT SITE BEFORE EXECUTION.
5. ALL CONCRETE IS CONSIDERED AS RCC WITH M 15 & 1% T.T. THICK PLASTERING OF 1:4 CEMENT MORTAR ON ALL EXPOSED SURFACES.
6. ALL BRICKWORK IS CONSIDERED AS 1:6 CEMENT MORTAR & 1% T.T. THICK PLASTERING OF 1:4 CEMENT MORTAR ON ALL EXPOSED SURFACES.
7. ALL BRICKWORK SHALL BE IN CLASS 75 BRICKS.
8. ALL STEEL WORKS & BALLAST CUSHION ARE FOR LIGHT LINE.
RESTRICTIONS IN USE OF LAND
1. FOR RAIL CORRIDOR : 60 METRE (Open)
2. ELECTRIC SUBSTATION : 45m x 30m
3. ELECTRIC SUBSTATION : 45m x 30m & 2 NOS OF 30m x 30m
4. ALL TUNNELS 9.4M, 7.1 M CLEARANCE (UNDERSIDE)
FIGURE FROM SOMPETA SIDE UP KM 74.000
Fly Fly Over
Ry Railway
Rd Road
Tr Tunnel
Br Bridge
Op Opposite
Ch Chainage
Ex Existing
Pr Proposed
Ry Railway
Rd Road
Tr Tunnel
Br Bridge
Op Opposite
Ch Chainage
Ex Existing
Pr Proposed
RH - RIGHT HANDED
LH - LEFT HANDED
FW - FROG WIDTH
FL - FROG LENGTH
TS - TANGENT SLOPE
TA - TANGENT LENGTH
CR - CURVE RADIUS
DA - DEFLECTION ANGLE
CL - CENTRE LINE
D - DEGREE OF CURVE
SW - SWITCH WIDTH
NORTH
SCALE
1:1000
0 10 20 30 40 50 60 70 80 90 100 m
NATIONAL RAIL INFRASTRUCTURE DEVELOPMENT CORPORATION
NATIONAL RAIL CORRIDOR
CONSTRUCTION OF DEDICATED FREIGHT CORRIDOR
GC/HORC
NAME / DESIGNATION
SIGN
CHAHTEY RAM
PD
SUDHIR AGRAWAL
PD(C)
RAJENDRA KR. BHAUGUNA
CPM(C)
KRISHAN CHAND SAINSI
CRS/O/L
AMARNATH SINGH
CRS/E/ST
A.S. JANGHU
CRE/E/ST
HRIDC
NAME / DESIGNATION
SIGN
VISHAL GUPTA
CPM/NORTH.
DGM/C/VIL
AM/S&T
CONSULTANT
CONSORTIUM OF M/S RITES LTD. & M/S IRCON INTERNATIONAL LTD.
TITLE
GC/HORC/DRG/CIVIL/STATION YARD/LAYOUT/001
GC WORK
SHEET NO.
1
TOTAL SHEETS
1
REVISION
0
DESIGNED
RAKESH
DRAWN
RAKESH
CHECKED
SANJEEV
APPROVED
SANJEEV
DATE
26.12.2013
janvee associates
JANVEE ASSOCIATES
SCALE
1:1000
DATE
26.12.2013
BASIC STN. : TOWARDS SONIPAT
BASIC STN. : TOWARDS RAJ NAGAR
KM 72.000
KM 73.000
KM 71.000
KM 70.000
KM 69.000
KM 68.000
KM 67.000
KM 66.000
KM 65.000
KM 64.000
KM 63.000
KM 62.000
KM 61.000
KM 60.000
KM 59.000
KM 58.000
KM 57.000
KM 56.000
KM 55.000
KM 54.000
KM 53.000
KM 52.000
KM 51.000
KM 50.000
KM 49.000
KM 48.000
KM 47.000
KM 46.000
KM 45.000
KM 44.000
KM 43.000
KM 42.000
KM 41.000
KM 40.000
KM 39.000
KM 38.000
KM 37.000
KM 36.000
KM 35.000
KM 34.000
KM 33.000
KM 32.000
KM 31.000
KM 30.000
KM 29.000
KM 28.000
KM 27.000
KM 26.000
KM 25.000
KM 24.000
KM 23.000
KM 22.000
KM 21.000
KM 20.000
KM 19.000
KM 18.000
KM 17.000
KM 16.000
KM 15.000
KM 14.000
KM 13.000
KM 12.000
KM 11.000
KM 10.000
KM 9.000
KM 8.000
KM 7.000
KM 6.000
KM 5.000
KM 4.000
KM 3.000
KM 2.000
KM 1.000
KM 0.000
TOWARDS SONIPAT
TOWARDS RAJ NAGAR
MAIN LINE
LOOP LINE
ROAD
TOWER
CHECK
CHECK RAIL
CHECK RAIL ROAD

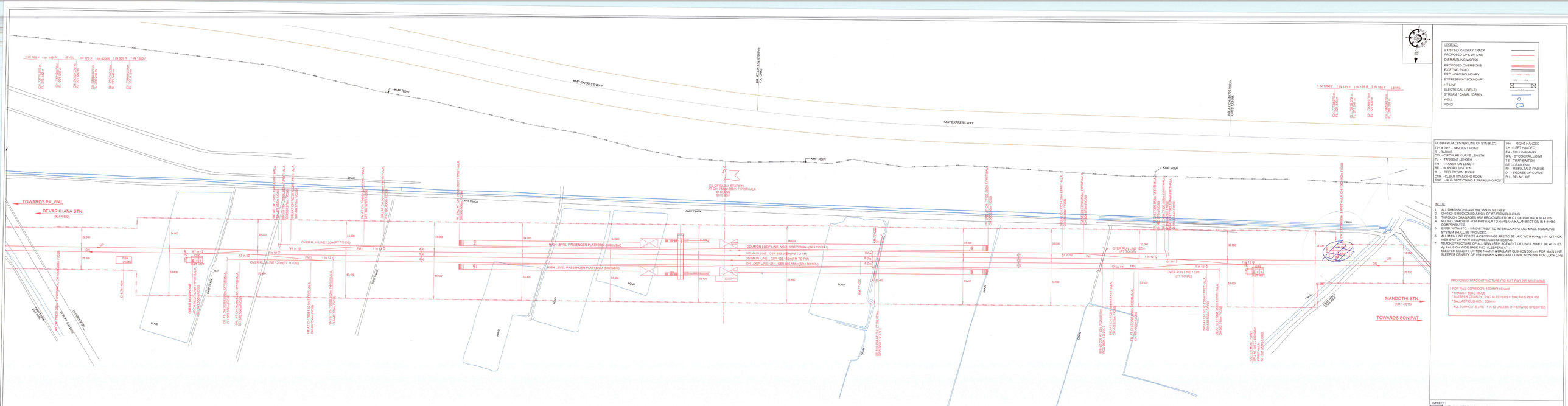

CSR DETAILS FOR BADLI YARD					
LINE NO	LINE NOTATION	START		END	TOTAL LENGTH OF CSR
LINE NO-1	LOOP LINE 1	SIU	76306.502	SIU 77271.658	885.1560
LINE NO-2	DN MAIN LINE	FM	76363.524	FM 77296.636	935.132
LINE NO-3	UP MAIN LINE	FM	76419.302	FM 77239.058	819.956
LINE NO-4	LOOP LINE 2	SIU	76444.080	SIU 77214.080	770.0000

GC/HORC		HRIDC	
NAME / DESIGNATION	SIGN	NAME / DESIGNATION	SIGN
CHAHATEY RAM *PD*		VISHAL GUPTA *CPM/ NORTH*	
SUDHIR AGRAWAL *DPD/CIVIL*		*DGM/CIVIL*	
RAJENDRA KR. BHAGUNA *DPD/EST*		*AM/S&T*	
KRISHAN CHAND SAINSI *CRE/CIVIL*			
AMARNATH SINGH *CRE/S&T*			
A.S. JANGHU *CRE/ELECT.*			

LEGEND:
EXISTING RAILWAY TRACK
PROPOSED UP & DN LINE
DISMANTLING WORKS
PROPOSED DIVERSIONS
EXISTING ROAD
PRO HORC BOUNDARY
EXPRESSWAY BOUNDARY
HT LINE
ELECTRICAL LINE(LT)
STREAM / CANAL / DRAIN
WELL
POND

FCSB-FROM CENTER LINE OF STN BLDG
TP1 & TP2 - TANGENT POINT
R - RADIUS
CCL - CIRCULAR CURVE LENGTH
TL - TANGENT LENGTH
TR - TRANSITION LENGTH
SE - SUPERELEVATION
Δ - DEFLECTION ANGLE
CSR - CLEAR STANDING ROOM
SSP - SUB SECTIONING & PARALLING POST
RH - RIGHT HANDED
LH - LEFT HANDED
FM - FOULING MARK
BRJ - STOCK RAIL JOINT
TB - TRAP SWITCH
DE - DEAD END
RV - REBUILTANT RADIUS
D - DEGREE OF CURVE
RH - RELAY HUT

NOTE:
1. ALL DIMENSIONS ARE SHOWN IN METRES
2. CH 0.00 IS REDCKONED AS C L OF STATION BUILDING
3. ALL EXISTING STRUCTURES ARE REMOVED FROM C L OF PRITHALA STATION.
4. RULING GRADIENT FOR PRITHALA TO HARSANA KALAN SECTION IS 1 IN 150 COMPENSATED.
5. EI(IB) WITH BTD, I-I DISTRIBUTED INTERLOCKING AND MACL SIGNALING SYSTEM SHALL BE PROVIDED.
6. ALL MAIN LINE POINTS & CROSSINGS ARE TO BE LAID WITH 60 Kg, 1 IN 12 THICK WEB SWITCH WITH WELDABLE CMS CROSSING.
7. TRACK STRUCTURE OF ALL NEW / REPLACEMENT OF LINES SHALL BE WITH 60 Kg RAILS ON WIDE BASE PKC SLEEPERS AT
- MAIN LINE DENSITY OF 1540 Nos/Km & BALLAST CUSHION 350 mm FOR MAIN LINE.
- SLEEPER DENSITY OF 1540 Nos/Km & BALLAST CUSHION 250 MM FOR LOOP LINE.

PROPOSED TRACK STRUCTURE (TO SUIT FOR 25T AXLE LOAD

- FOR RAIL CORRIDOR: 160KM/H+ Speed
- * TRACK = 60KG RAILS
- * SLEEPER DENSITY : PSC SLEEPERS = 1660 Nos S PER KM
- * BALLAST CUSHION : 350mm
- * ALL TURNOUTS ARE 1 in 12 UNLESS OTHERWISE SPECIFIED

PROJECT:
HARYANA ORBITAL RAIL CORRIDOR
CONNECTING PALWAL TO SONIPAT BYPASSING DELHI AREA BY LINKING KHUSHPUR(LOCO SHED) PALWAL-KHALEMA-BALLABGARH BY NEW ELECTRIFIED BG DOUBLE LINE

CLIENT:
HARYANA RAIL INFRASTRUCTURE DEVELOPMENT CORPORATION LIMITED

GENERAL CONSULTANT:
GENERAL CONSULTANT FOR HARYANA ORBITAL RAIL CORRIDOR
RITES Limited (A miniratna PSU, Government of India Enterprise)

TITLE : CONCEPTUAL ENGINEERING SCALE PLAN
BADLI CROSSING STATION YARD CH:76928.280m F/ PRITHALA

GC ORG.NO. :	GC-HRCC-CE-CIV-STN-ESP-BDLST_A0
ISSUED DT. :	20.06.2022
REVISED DT. :	
CONSULTANTS :	AARVEE ASSOCIATES

aarvee associates
architects engineers & consultants pvt ltd
Aarvee House, 9, Basant Lok, Vasant Vihar, New Delhi - 110 057
Tel: 91-11-26142400, Fax: 91-11-26142211
e-mail: mail@aarveeassociates.com www.aarveeassociates.com

DRG.NO.:AA/RLY/GAD/RRCC/ESP-10/REV-E	SHEET No. 1		
SCALE : 1:1000	ISSUED DT. : 26.11.2019	REV. DT. : 28.06.2022	
	DESIGNED BY: DR LOCO DRAWN :	CHECKED BY:	APPROVED BY:

LEGEND:
EXISTING RAILWAY TRACK
PROPOSED RAILWAY TRACK
DEMARCATED AREA
PROPOSED BOUNDARY
PROPOSED BOUNDARY
LINE
CENTRAL LINE
EXISTING CANAL DRAIN
ROAD
PKM
NOTE:
ALL DIMENSIONS ARE SHOWN IN METRES.
THE LEVELS SHOWN ARE WITH REFERENCE TO MEAN SEA LEVEL.
TRACK DIMENSIONS ARE MEASURED FROM C.L. OF RAILWAY TRACK.
ALL DIMENSIONS ARE SUBJECT TO CONFIRMATION BY JOINT SURVEY.
EVERY STRUCTURE SHALL BE PROVIDED WITH HANDRAIL.
ALL DIMENSIONS ARE SHOWN IN METRES.
ALL LEVELS ARE WITH REFERENCE TO MEAN SEA LEVEL.
ALL CHAINAGES ARE SHOWN IN KILOMETRES.
ALL DIMENSIONS ARE SHOWN IN METRES.
ALL LEVELS ARE WITH REFERENCE TO MEAN SEA LEVEL.
ALL CHAINAGES ARE SHOWN IN KILOMETRES.
REFERRED TRACK STRUCTURE DETAILS FOR DFC
1. FOR RAIL CORRIDOR: TRD/PR-RAIL
2. FOR ROAD CORRIDOR: TRD/PR-ROAD
3. SLEEPER DENSITY : PRC SLEEPERS 1660 NOS PER KM
4. ALL TURNOUTS ARE 1 IN 12 UNLESS OTHERWISE SPECIFIED
DESIGN DATA FOR DFC
1. DESIGN SPEED : 100 KMPH
2. DESIGN AXLE LOAD : 32.5 TONNES
3. TRACK GAUGE : 1676 MM
4. MAXIMUM GRADIENT : 1 IN 200
5. MINIMUM RADIUS OF CURVE : 875 M
6. MINIMUM LENGTH OF TANGENT BETWEEN REVERSE CURVES : 0 M
7. MINIMUM LENGTH OF TANGENT BETWEEN TWO SIMPLE CURVES : 0 M
8. MINIMUM LENGTH OF TRANSITION : 0 M
9. MINIMUM LENGTH OF TRANSITION BETWEEN SIMPLE CURVE AND REVERSE CURVE : 0 M
10. MINIMUM LENGTH OF TRACK BETWEEN TWO SIMPLE CURVES : 0 M
11. MINIMUM LENGTH OF TRACK BETWEEN A SIMPLE CURVE AND REVERSE CURVE : 0 M
12. MINIMUM LENGTH OF TRACK BETWEEN TWO REVERSE CURVES : 0 M
13. MINIMUM LENGTH OF TRACK BETWEEN A SIMPLE CURVE AND A TURNOUT : 0 M
14. MINIMUM LENGTH OF TRACK BETWEEN A REVERSE CURVE AND A TURNOUT : 0 M
15. MINIMUM LENGTH OF TRACK BETWEEN TWO TURNOUTS : 0 M
16. MINIMUM LENGTH OF TRACK BETWEEN A TURNOUT AND A SIMPLE CURVE : 0 M
17. MINIMUM LENGTH OF TRACK BETWEEN A TURNOUT AND A REVERSE CURVE : 0 M
18. MINIMUM LENGTH OF TRACK BETWEEN TWO TURNOUTS : 0 M
19. MINIMUM LENGTH OF TRACK BETWEEN A SIMPLE CURVE AND A TURNOUT : 0 M
20. MINIMUM LENGTH OF TRACK BETWEEN A REVERSE CURVE AND A TURNOUT : 0 M
21. MINIMUM LENGTH OF TRACK BETWEEN TWO TURNOUTS : 0 M
22. MINIMUM LENGTH OF TRACK BETWEEN A SIMPLE CURVE AND A TURNOUT : 0 M
23. MINIMUM LENGTH OF TRACK BETWEEN A REVERSE CURVE AND A TURNOUT : 0 M
24. MINIMUM LENGTH OF TRACK BETWEEN TWO TURNOUTS : 0 M
25. MINIMUM LENGTH OF TRACK BETWEEN A SIMPLE CURVE AND A TURNOUT : 0 M
26. MINIMUM LENGTH OF TRACK BETWEEN A REVERSE CURVE AND A TURNOUT : 0 M
27. MINIMUM LENGTH OF TRACK BETWEEN TWO TURNOUTS : 0 M
28. MINIMUM LENGTH OF TRACK BETWEEN A SIMPLE CURVE AND A TURNOUT : 0 M
29. MINIMUM LENGTH OF TRACK BETWEEN A REVERSE CURVE AND A TURNOUT : 0 M
30. MINIMUM LENGTH OF TRACK BETWEEN TWO TURNOUTS : 0 M
31. MINIMUM LENGTH OF TRACK BETWEEN A SIMPLE CURVE AND A TURNOUT : 0 M
32. MINIMUM LENGTH OF TRACK BETWEEN A REVERSE CURVE AND A TURNOUT : 0 M
33. MINIMUM LENGTH OF TRACK BETWEEN TWO TURNOUTS : 0 M
34. MINIMUM LENGTH OF TRACK BETWEEN A SIMPLE CURVE AND A TURNOUT : 0 M
35. MINIMUM LENGTH OF TRACK BETWEEN A REVERSE CURVE AND A TURNOUT : 0 M
36. MINIMUM LENGTH OF TRACK BETWEEN TWO TURNOUTS : 0 M
37. MINIMUM LENGTH OF TRACK BETWEEN A SIMPLE CURVE AND A TURNOUT : 0 M
38. MINIMUM LENGTH OF TRACK BETWEEN A REVERSE CURVE AND A TURNOUT : 0 M
39. MINIMUM LENGTH OF TRACK BETWEEN TWO TURNOUTS : 0 M
40. MINIMUM LENGTH OF TRACK BETWEEN A SIMPLE CURVE AND A TURNOUT : 0 M
41. MINIMUM LENGTH OF TRACK BETWEEN A REVERSE CURVE AND A TURNOUT : 0 M
42. MINIMUM LENGTH OF TRACK BETWEEN TWO TURNOUTS : 0 M
43. MINIMUM LENGTH OF TRACK BETWEEN A SIMPLE CURVE AND A TURNOUT : 0 M
44. MINIMUM LENGTH OF TRACK BETWEEN A REVERSE CURVE AND A TURNOUT : 0 M
45. MINIMUM LENGTH OF TRACK BETWEEN TWO TURNOUTS : 0 M
46. MINIMUM LENGTH OF TRACK BETWEEN A SIMPLE CURVE AND A TURNOUT : 0 M
47. MINIMUM LENGTH OF TRACK BETWEEN A REVERSE CURVE AND A TURNOUT : 0 M
48. MINIMUM LENGTH OF TRACK BETWEEN TWO TURNOUTS : 0 M
49. MINIMUM LENGTH OF TRACK BETWEEN A SIMPLE CURVE AND A TURNOUT : 0 M
50. MINIMUM LENGTH OF TRACK BETWEEN A REVERSE CURVE AND A TURNOUT : 0 M
51. MINIMUM LENGTH OF TRACK BETWEEN TWO TURNOUTS : 0 M
52. MINIMUM LENGTH OF TRACK BETWEEN A SIMPLE CURVE AND A TURNOUT : 0 M
53. MINIMUM LENGTH OF TRACK BETWEEN A REVERSE CURVE AND A TURNOUT : 0 M
54. MINIMUM LENGTH OF TRACK BETWEEN TWO TURNOUTS : 0 M
55. MINIMUM LENGTH OF TRACK BETWEEN A SIMPLE CURVE AND A TURNOUT : 0 M
56. MINIMUM LENGTH OF TRACK BETWEEN A REVERSE CURVE AND A TURNOUT : 0 M
57. MINIMUM LENGTH OF TRACK BETWEEN TWO TURNOUTS : 0 M
58. MINIMUM LENGTH OF TRACK BETWEEN A SIMPLE CURVE AND A TURNOUT : 0 M
59. MINIMUM LENGTH OF TRACK BETWEEN A REVERSE CURVE AND A TURNOUT : 0 M
60. MINIMUM LENGTH OF TRACK BETWEEN TWO TURNOUTS : 0 M
61. MINIMUM LENGTH OF TRACK BETWEEN A SIMPLE CURVE AND A TURNOUT : 0 M
62. MINIMUM LENGTH OF TRACK BETWEEN A REVERSE CURVE AND A TURNOUT : 0 M
63. MINIMUM LENGTH OF TRACK BETWEEN TWO TURNOUTS : 0 M
64. MINIMUM LENGTH OF TRACK BETWEEN A SIMPLE CURVE AND A TURNOUT : 0 M
65. MINIMUM LENGTH OF TRACK BETWEEN A REVERSE CURVE AND A TURNOUT : 0 M
66. MINIMUM LENGTH OF TRACK BETWEEN TWO TURNOUTS : 0 M
67. MINIMUM LENGTH OF TRACK BETWEEN A SIMPLE CURVE AND A TURNOUT : 0 M
68. MINIMUM LENGTH OF TRACK BETWEEN A REVERSE CURVE AND A TURNOUT : 0 M
69. MINIMUM LENGTH OF TRACK BETWEEN TWO TURNOUTS : 0 M
70. MINIMUM LENGTH OF TRACK BETWEEN A SIMPLE CURVE AND A TURNOUT : 0 M
71. MINIMUM LENGTH OF TRACK BETWEEN A REVERSE CURVE AND A TURNOUT : 0 M
72. MINIMUM LENGTH OF TRACK BETWEEN TWO TURNOUTS : 0 M
73. MINIMUM LENGTH OF TRACK BETWEEN A SIMPLE CURVE AND A TURNOUT : 0 M
74. MINIMUM LENGTH OF TRACK BETWEEN A REVERSE CURVE AND A TURNOUT : 0 M
75. MINIMUM LENGTH OF TRACK BETWEEN TWO TURNOUTS : 0 M
76. MINIMUM LENGTH OF TRACK BETWEEN A SIMPLE CURVE AND A TURNOUT : 0 M
77. MINIMUM LENGTH OF TRACK BETWEEN A REVERSE CURVE AND A TURNOUT : 0 M
78. MINIMUM LENGTH OF TRACK BETWEEN TWO TURNOUTS : 0 M
79. MINIMUM LENGTH OF TRACK BETWEEN A SIMPLE CURVE AND A TURNOUT : 0 M
80. MINIMUM LENGTH OF TRACK BETWEEN A REVERSE CURVE AND A TURNOUT : 0 M
81. MINIMUM LENGTH OF TRACK BETWEEN TWO TURNOUTS : 0 M
82. MINIMUM LENGTH OF TRACK BETWEEN A SIMPLE CURVE AND A TURNOUT : 0 M
83. MINIMUM LENGTH OF TRACK BETWEEN A REVERSE CURVE AND A TURNOUT : 0 M
84. MINIMUM LENGTH OF TRACK BETWEEN TWO TURNOUTS : 0 M
85. MINIMUM LENGTH OF TRACK BETWEEN A SIMPLE CURVE AND A TURNOUT : 0 M
86. MINIMUM LENGTH OF TRACK BETWEEN A REVERSE CURVE AND A TURNOUT : 0 M
87. MINIMUM LENGTH OF TRACK BETWEEN TWO TURNOUTS : 0 M
88. MINIMUM LENGTH OF TRACK BETWEEN A SIMPLE CURVE AND A TURNOUT : 0 M
89. MINIMUM LENGTH OF TRACK BETWEEN A REVERSE CURVE AND A TURNOUT : 0 M
90. MINIMUM LENGTH OF TRACK BETWEEN TWO TURNOUTS : 0 M
91. MINIMUM LENGTH OF TRACK BETWEEN A SIMPLE CURVE AND A TURNOUT : 0 M
92. MINIMUM LENGTH OF TRACK BETWEEN A REVERSE CURVE AND A TURNOUT : 0 M
93. MINIMUM LENGTH OF TRACK BETWEEN TWO TURNOUTS : 0 M
94. MINIMUM LENGTH OF TRACK BETWEEN A SIMPLE CURVE AND A TURNOUT : 0 M
95. MINIMUM LENGTH OF TRACK BETWEEN A REVERSE CURVE AND A TURNOUT : 0 M
96. MINIMUM LENGTH OF TRACK BETWEEN TWO TURNOUTS : 0 M
97. MINIMUM LENGTH OF TRACK BETWEEN A SIMPLE CURVE AND A TURNOUT : 0 M
98. MINIMUM LENGTH OF TRACK BETWEEN A REVERSE CURVE AND A TURNOUT : 0 M
99. MINIMUM LENGTH OF TRACK BETWEEN TWO TURNOUTS : 0 M
100. MINIMUM LENGTH OF TRACK BETWEEN A SIMPLE CURVE AND A TURNOUT : 0 M
101. MINIMUM LENGTH OF TRACK BETWEEN A REVERSE CURVE AND A TURNOUT : 0 M
102. MINIMUM LENGTH OF TRACK BETWEEN TWO TURNOUTS : 0 M
103. MINIMUM LENGTH OF TRACK BETWEEN A SIMPLE CURVE AND A TURNOUT : 0 M
104. MINIMUM LENGTH OF TRACK BETWEEN A REVERSE CURVE AND A TURNOUT : 0 M
105. MINIMUM LENGTH OF TRACK BETWEEN TWO TURNOUTS : 0 M
106. MINIMUM LENGTH OF TRACK BETWEEN A SIMPLE CURVE AND A TURNOUT : 0 M
107. MINIMUM LENGTH OF TRACK BETWEEN A REVERSE CURVE AND A TURNOUT : 0 M
108. MINIMUM LENGTH OF TRACK BETWEEN TWO TURNOUTS : 0 M
109. MINIMUM LENGTH OF TRACK BETWEEN A SIMPLE CURVE AND A TURNOUT : 0 M
110. MINIMUM LENGTH OF TRACK BETWEEN A REVERSE CURVE AND A TURNOUT : 0 M
111. MINIMUM LENGTH OF TRACK BETWEEN TWO TURNOUTS : 0 M
112. MINIMUM LENGTH OF TRACK BETWEEN A SIMPLE CURVE AND A TURNOUT : 0 M
113. MINIMUM LENGTH OF TRACK BETWEEN A REVERSE CURVE AND A TURNOUT : 0 M
114. MINIMUM LENGTH OF TRACK BETWEEN TWO TURNOUTS : 0 M
115. MINIMUM LENGTH OF TRACK BETWEEN A SIMPLE CURVE AND A TURNOUT : 0 M
116. MINIMUM LENGTH OF TRACK BETWEEN A REVERSE CURVE AND A TURNOUT : 0 M
117. MINIMUM LENGTH OF TRACK BETWEEN TWO TURNOUTS : 0 M
118. MINIMUM LENGTH OF TRACK BETWEEN A SIMPLE CURVE AND A TURNOUT : 0 M
119. MINIMUM LENGTH OF TRACK BETWEEN A REVERSE CURVE AND A TURNOUT : 0 M
120. MINIMUM LENGTH OF TRACK BETWEEN TWO TURNOUTS : 0 M
121. MINIMUM LENGTH OF TRACK BETWEEN A SIMPLE CURVE AND A TURNOUT : 0 M
122. MINIMUM LENGTH OF TRACK BETWEEN A REVERSE CURVE AND A TURNOUT : 0 M
123. MINIMUM LENGTH OF TRACK BETWEEN TWO TURNOUTS : 0 M
124. MINIMUM LENGTH OF TRACK BETWEEN A SIMPLE CURVE AND A TURNOUT : 0 M
125. MINIMUM LENGTH OF TRACK BETWEEN A REVERSE CURVE AND A TURNOUT : 0 M
126. MINIMUM LENGTH OF TRACK BETWEEN TWO TURNOUTS : 0 M
127. MINIMUM LENGTH OF TRACK BETWEEN A SIMPLE CURVE AND A TURNOUT : 0 M
128. MINIMUM LENGTH OF TRACK BETWEEN A REVERSE CURVE AND A TURNOUT : 0 M
129. MINIMUM LENGTH OF TRACK BETWEEN TWO TURNOUTS : 0 M
130. MINIMUM LENGTH OF TRACK BETWEEN A SIMPLE CURVE AND A TURNOUT : 0 M
131. MINIMUM LENGTH OF TRACK BETWEEN A REVERSE CURVE AND A TURNOUT : 0 M
132. MINIMUM LENGTH OF TRACK BETWEEN TWO TURNOUTS : 0 M
133. MINIMUM LENGTH OF TRACK BETWEEN A SIMPLE CURVE AND A TURNOUT : 0 M
134. MINIMUM LENGTH OF TRACK BETWEEN A REVERSE CURVE AND A TURNOUT : 0 M
135. MINIMUM LENGTH OF TRACK BETWEEN TWO TURNOUTS : 0 M
136. MINIMUM LENGTH OF TRACK BETWEEN A SIMPLE CURVE AND A TURNOUT : 0 M
137. MINIMUM LENGTH OF TRACK BETWEEN A REVERSE CURVE AND A TURNOUT : 0 M
138. MINIMUM LENGTH OF TRACK BETWEEN TWO TURNOUTS : 0 M
139. MINIMUM LENGTH OF TRACK BETWEEN A SIMPLE CURVE AND A TURNOUT : 0 M
140. MINIMUM LENGTH OF TRACK BETWEEN A REVERSE CURVE AND A TURNOUT : 0 M
141. MINIMUM LENGTH OF TRACK BETWEEN TWO TURNOUTS : 0 M
142. MINIMUM LENGTH OF TRACK BETWEEN A SIMPLE CURVE AND A TURNOUT : 0 M
143. MINIMUM LENGTH OF TRACK BETWEEN A REVERSE CURVE AND A TURNOUT : 0 M
144. MINIMUM LENGTH OF TRACK BETWEEN TWO TURNOUTS : 0 M
145. MINIMUM LENGTH OF TRACK BETWEEN A SIMPLE CURVE AND A TURNOUT : 0 M
146. MINIMUM LENGTH OF TRACK BETWEEN A REVERSE CURVE AND A TURNOUT : 0 M
147. MINIMUM LENGTH OF TRACK BETWEEN TWO TURNOUTS : 0 M
148. MINIMUM LENGTH OF TRACK BETWEEN A SIMPLE CURVE AND A TURNOUT : 0 M
149. MINIMUM LENGTH OF TRACK BETWEEN A REVERSE CURVE AND A TURNOUT : 0 M
150. MINIMUM LENGTH OF TRACK BETWEEN TWO TURNOUTS : 0 M
151. MINIMUM LENGTH OF TRACK BETWEEN A SIMPLE CURVE AND A TURNOUT : 0 M
152. MINIMUM LENGTH OF TRACK BETWEEN A REVERSE CURVE AND A TURNOUT : 0 M
153. MINIMUM LENGTH OF TRACK BETWEEN TWO TURNOUTS : 0 M
154. MINIMUM LENGTH OF TRACK BETWEEN A SIMPLE CURVE AND A TURNOUT : 0 M
155. MINIMUM LENGTH OF TRACK BETWEEN A REVERSE CURVE AND A TURNOUT : 0 M
156. MINIMUM LENGTH OF TRACK BETWEEN TWO TURNOUTS : 0 M
157. MINIMUM LENGTH OF TRACK BETWEEN A SIMPLE CURVE AND A TURNOUT : 0 M
158. MINIMUM LENGTH OF TRACK BETWEEN A REVERSE CURVE AND A TURNOUT : 0 M
159. MINIMUM LENGTH OF TRACK BETWEEN TWO TURNOUTS : 0 M
160. MINIMUM LENGTH OF TRACK BETWEEN A SIMPLE CURVE AND A TURNOUT : 0 M
161. MINIMUM LENGTH OF TRACK BETWEEN A REVERSE CURVE AND A TURNOUT : 0 M
162. MINIMUM LENGTH OF TRACK BETWEEN TWO TURNOUTS : 0 M
163. MINIMUM LENGTH OF TRACK BETWEEN A SIMPLE CURVE AND A TURNOUT : 0 M
164. MINIMUM LENGTH OF TRACK BETWEEN A REVERSE CURVE AND A TURNOUT : 0 M
165. MINIMUM LENGTH OF TRACK BETWEEN TWO TURNOUTS : 0 M
166. MINIMUM LENGTH OF TRACK BETWEEN A SIMPLE CURVE AND A TURNOUT : 0 M
167. MINIMUM LENGTH OF TRACK BETWEEN A REVERSE CURVE AND A TURNOUT : 0 M
168. MINIMUM LENGTH OF TRACK BETWEEN TWO TURNOUTS : 0 M
169. MINIMUM LENGTH OF TRACK BETWEEN A SIMPLE CURVE AND A TURNOUT : 0 M
170. MINIMUM LENGTH OF TRACK BETWEEN A REVERSE CURVE AND A TURNOUT : 0 M
171. MINIMUM LENGTH OF TRACK BETWEEN TWO TURNOUTS : 0 M
172. MINIMUM LENGTH OF TRACK BETWEEN A SIMPLE CURVE AND A TURNOUT : 0 M
173. MINIMUM LENGTH OF TRACK BETWEEN A REVERSE CURVE AND A TURNOUT : 0 M
174. MINIMUM LENGTH OF TRACK BETWEEN TWO TURNOUTS : 0 M
175. MINIMUM LENGTH OF TRACK BETWEEN A SIMPLE CURVE AND A TURNOUT : 0 M
176. MINIMUM LENGTH OF TRACK BETWEEN A REVERSE CURVE AND A TURNOUT : 0 M
177. MINIMUM LENGTH OF TRACK BETWEEN TWO TURNOUTS : 0 M
178. MINIMUM LENGTH OF TRACK BETWEEN A SIMPLE CURVE AND A TURNOUT : 0 M
179. MINIMUM LENGTH OF TRACK BETWEEN A REVERSE CURVE AND A TURNOUT : 0 M
180. MINIMUM LENGTH OF TRACK BETWEEN TWO TURNOUTS : 0 M
181. MINIMUM LENGTH OF TRACK BETWEEN A SIMPLE CURVE AND A TURNOUT : 0 M
182. MINIMUM LENGTH OF TRACK BETWEEN A REVERSE CURVE AND A TURNOUT : 0 M
183. MINIMUM LENGTH OF TRACK BETWEEN TWO TURNOUTS : 0 M
184. MINIMUM LENGTH OF TRACK BETWEEN A SIMPLE CURVE AND A TURNOUT : 0 M
185. MINIMUM LENGTH OF TRACK BETWEEN A REVERSE CURVE AND A TURNOUT : 0 M
186. MINIMUM LENGTH OF TRACK BETWEEN TWO TURNOUTS : 0 M
187. MINIMUM LENGTH OF TRACK BETWEEN A SIMPLE CURVE AND A TURNOUT : 0 M
188. MINIMUM LENGTH OF TRACK BETWEEN A REVERSE CURVE AND A TURNOUT : 0 M
189. MINIMUM LENGTH OF TRACK BETWEEN TWO TURNOUTS : 0 M
190. MINIMUM LENGTH OF TRACK BETWEEN A SIMPLE CURVE AND A TURNOUT : 0 M
191. MINIMUM LENGTH OF TRACK BETWEEN A REVERSE CURVE AND A TURNOUT : 0 M
192. MINIMUM LENGTH OF TRACK BETWEEN TWO TURNOUTS : 0 M
193. MINIMUM LENGTH OF TRACK BETWEEN A SIMPLE CURVE AND A TURNOUT : 0 M
194. MINIMUM LENGTH OF TRACK BETWEEN A REVERSE CURVE AND A TURNOUT : 0 M
195. MINIMUM LENGTH OF TRACK BETWEEN TWO TURNOUTS : 0 M
196. MINIMUM LENGTH OF TRACK BETWEEN A SIMPLE CURVE AND A TURNOUT : 0 M
197. MINIMUM LENGTH OF TRACK BETWEEN A REVERSE CURVE AND A TURNOUT : 0 M
198. MINIMUM LENGTH OF TRACK BETWEEN TWO TURNOUTS : 0 M
199. MINIMUM LENGTH OF TRACK BETWEEN A SIMPLE CURVE AND A TURNOUT : 0 M
200. MINIMUM LENGTH OF TRACK BETWEEN A REVERSE CURVE AND A TURNOUT : 0 M
201. MINIMUM LENGTH OF TRACK BETWEEN TWO TURNOUTS : 0 M
202. MINIMUM LENGTH OF TRACK BETWEEN A SIMPLE CURVE AND A TURNOUT : 0 M
203. MINIMUM LENGTH OF TRACK BETWEEN A REVERSE CURVE AND A TURNOUT : 0 M
204. MINIMUM LENGTH OF TRACK BETWEEN TWO TURNOUTS : 0 M
205. MINIMUM LENGTH OF TRACK BETWEEN A SIMPLE CURVE AND A TURNOUT : 0 M
206. MINIMUM LENGTH OF TRACK BETWEEN A REVERSE CURVE AND A TURNOUT : 0 M
207. MINIMUM LENGTH OF TRACK BETWEEN TWO TURNOUTS : 0 M
208. MINIMUM LENGTH OF TRACK BETWEEN A SIMPLE CURVE AND A TURNOUT : 0 M
209. MINIMUM LENGTH OF TRACK BETWEEN A REVERSE CURVE AND A TURNOUT : 0 M
210. MINIMUM LENGTH OF TRACK BETWEEN TWO TURNOUTS : 0 M
211. MINIMUM LENGTH OF TRACK BETWEEN A SIMPLE CURVE AND A TURNOUT : 0 M
212. MINIMUM LENGTH OF TRACK BETWEEN A REVERSE CURVE AND A TURNOUT : 0 M
213. MINIMUM LENGTH OF TRACK BETWEEN TWO TURNOUTS : 0 M
214. MINIMUM LENGTH OF TRACK BETWEEN A SIMPLE CURVE AND A TURNOUT : 0 M
215. MINIMUM LENGTH OF TRACK BETWEEN A REVERSE CURVE AND A TURNOUT : 0 M
216. MINIMUM LENGTH OF TRACK BETWEEN TWO TURNOUTS : 0 M
217. MINIMUM LENGTH OF TRACK BETWEEN A SIMPLE CURVE AND A TURNOUT : 0 M
218. MINIMUM LENGTH OF TRACK BETWEEN A REVERSE CURVE AND A TURNOUT : 0 M
219. MINIMUM LENGTH OF TRACK BETWEEN TWO TURNOUTS : 0 M
220. MINIMUM LENGTH OF TRACK BETWEEN A SIMPLE CURVE AND A TURNOUT : 0 M
221. MINIMUM LENGTH OF TRACK BETWEEN A REVERSE CURVE AND A TURNOUT : 0 M
222. MINIMUM LENGTH OF TRACK BETWEEN TWO TURNOUTS : 0 M
223. MINIMUM LENGTH OF TRACK BETWEEN A SIMPLE CURVE AND A TURNOUT : 0 M
224. MINIMUM LENGTH OF TRACK BETWEEN A REVERSE CURVE AND A TURNOUT : 0 M
225. MINIMUM LENGTH OF TRACK BETWEEN TWO TURNOUTS : 0 M
226. MINIMUM LENGTH OF TRACK BETWEEN A SIMPLE CURVE AND A TURNOUT : 0 M
227. MINIMUM LENGTH OF TRACK BETWEEN A REVERSE CURVE AND A TURNOUT : 0 M
228. MINIMUM LENGTH OF TRACK BETWEEN TWO TURNOUTS : 0 M
229. MINIMUM LENGTH OF TRACK BETWEEN A SIMPLE CURVE AND A TURNOUT : 0 M
230. MINIMUM LENGTH OF TRACK BETWEEN A REVERSE CURVE AND A TURNOUT : 0 M
231. MINIMUM LENGTH OF TRACK BETWEEN TWO TURNOUTS : 0 M
232. MINIMUM LENGTH OF TRACK BETWEEN A SIMPLE CURVE AND A TURNOUT : 0 M
233. MINIMUM LENGTH OF TRACK BETWEEN A REVERSE CURVE AND A TURNOUT : 0 M
234. MINIMUM LENGTH OF TRACK BETWEEN TWO TURNOUTS : 0 M
235. MINIMUM LENGTH OF TRACK BETWEEN A SIMPLE CURVE AND A TURNOUT : 0 M
236. MINIMUM LENGTH OF TRACK BETWEEN A REVERSE CURVE AND A TURNOUT : 0 M
237. MINIMUM LENGTH OF TRACK BETWEEN TWO TURNOUTS : 0 M
238. MINIMUM LENGTH OF TRACK BETWEEN A SIMPLE CURVE AND A TURNOUT : 0 M
239. MINIMUM LENGTH OF TRACK BETWEEN A REVERSE CURVE AND A TURNOUT : 0 M
240. MINIMUM LENGTH OF TRACK BETWEEN TWO TURNOUTS : 0 M
241. MINIMUM LENGTH OF TRACK BETWEEN A SIMPLE CURVE AND A TURNOUT : 0 M
242. MINIMUM LENGTH OF TRACK BETWEEN A REVERSE CURVE AND A TURNOUT : 0 M
243. MINIMUM LENGTH OF TRACK BETWEEN TWO TURNOUTS : 0 M
244. MINIMUM LENGTH OF TRACK BETWEEN A SIMPLE CURVE AND A TURNOUT : 0 M
245. MINIMUM LENGTH OF TRACK BETWEEN A REVERSE CURVE AND A TURNOUT : 0 M
246. MINIMUM LENGTH OF TRACK BETWEEN TWO TURNOUTS : 0 M
247. MINIMUM LENGTH OF TRACK BETWEEN A SIMPLE CURVE AND A TURNOUT : 0 M
248. MINIMUM LENGTH OF TRACK BETWEEN A REVERSE CURVE AND A TURNOUT : 0 M
249. MINIMUM LENGTH OF TRACK BETWEEN TWO TURNOUTS : 0 M
250. MINIMUM LENGTH OF TRACK BETWEEN A SIMPLE CURVE AND A TURNOUT : 0 M
251. MINIMUM LENGTH OF TRACK BETWEEN A REVERSE CURVE AND A TURNOUT : 0 M
252. MINIMUM LENGTH OF TRACK BETWEEN TWO TURNOUTS : 0 M
253. MINIMUM LENGTH OF TRACK BETWEEN A SIMPLE CURVE AND A TURNOUT : 0 M
254. MINIMUM LENGTH OF TRACK BETWEEN A REVERSE CURVE AND A TURNOUT : 0 M
255. MINIMUM LENGTH OF TRACK BETWEEN TWO TURNOUTS : 0 M
256. MINIMUM LENGTH OF TRACK BETWEEN A SIMPLE CURVE AND A TURNOUT : 0 M
257. MINIMUM LENGTH OF TRACK BETWEEN A REVERSE CURVE AND A TURNOUT : 0 M
258. MINIMUM LENGTH OF TRACK BETWEEN TWO TURNOUTS : 0 M
259. MINIMUM LENGTH OF TRACK BETWEEN A SIMPLE CURVE AND A TURNOUT : 0 M
260. MINIMUM LENGTH OF TRACK BETWEEN A REVERSE CURVE AND A TURNOUT : 0 M
261. MINIMUM LENGTH OF TRACK BETWEEN TWO TURNOUTS : 0 M
262. MINIMUM LENGTH OF TRACK BETWEEN A SIMPLE CURVE AND A TURNOUT : 0 M
263. MINIMUM LENGTH OF TRACK BETWEEN A REVERSE CURVE AND A TURNOUT : 0 M
264. MINIMUM LENGTH OF TRACK BETWEEN TWO TURNOUTS : 0 M
265. MINIMUM LENGTH OF TRACK BETWEEN A SIMPLE CURVE AND A TURNOUT : 0 M
266. MINIMUM LENGTH OF TRACK BETWEEN A REVERSE CURVE AND A TURNOUT : 0 M
267. MINIMUM LENGTH OF TRACK BETWEEN TWO TURNOUTS : 0 M
268. MINIMUM LENGTH OF TRACK BETWEEN A SIMPLE CURVE AND A TURNOUT : 0 M
269. MINIMUM LENGTH OF TRACK BETWEEN A REVERSE CURVE AND A TURNOUT : 0 M
270. MINIMUM LENGTH OF TRACK BETWEEN TWO TURNOUTS : 0 M
271. MINIMUM LENGTH OF TRACK BETWEEN A SIMPLE CURVE AND A TURNOUT : 0 M
272. MINIMUM LENGTH OF TRACK BETWEEN A REVERSE CURVE AND A TURNOUT : 0 M
273. MINIMUM LENGTH OF TRACK BETWEEN TWO TURNOUTS : 0 M
274. MINIMUM LENGTH OF TRACK BETWEEN A SIMPLE CURVE AND A TURNOUT : 0 M
275. MINIMUM LENGTH OF TRACK BETWEEN A REVERSE CURVE AND A TURNOUT : 0 M
276. MINIMUM LENGTH OF TRACK BETWEEN TWO TURNOUTS : 0 M
277. MINIMUM LENGTH OF TRACK BETWEEN A SIMPLE CURVE AND A TURNOUT : 0 M
278. MINIMUM LENGTH OF TRACK BETWEEN A REVERSE CURVE AND A TURNOUT : 0 M
279. MINIMUM LENGTH OF TRACK BETWEEN TWO TURNOUTS : 0 M
280. MINIMUM LENGTH OF TRACK BETWEEN A SIMPLE CURVE AND A TURNOUT : 0 M
281. MINIMUM LENGTH OF TRACK BETWEEN A REVERSE CURVE AND A TURNOUT : 0 M
282. MINIMUM LENGTH OF TRACK BETWEEN TWO TURNOUTS : 0 M
283. MINIMUM LENGTH OF TRACK BETWEEN A SIMPLE CURVE AND A TURNOUT : 0 M
284. MINIMUM LENGTH OF TRACK BETWEEN A REVERSE CURVE AND A TURNOUT : 0 M
285. MINIMUM LENGTH OF TRACK BETWEEN TWO TURNOUTS : 0 M
286. MINIMUM LENGTH OF TRACK BETWEEN A SIMPLE CURVE AND A TURNOUT : 0 M
287. MINIMUM LENGTH OF TRACK BETWEEN A REVERSE CURVE AND A TURNOUT : 0 M
288. MINIMUM LENGTH OF TRACK BETWEEN TWO TURNOUTS : 0 M
289. MINIMUM LENGTH OF TRACK BETWEEN A SIMPLE CURVE AND A TURNOUT : 0 M
290. MINIMUM LENGTH OF TRACK BETWEEN A REVERSE CURVE AND A TURNOUT : 0 M
291. MINIMUM LENGTH OF TRACK BETWEEN TWO TURNOUTS : 0 M
292. MINIMUM LENGTH OF TRACK BETWEEN A SIMPLE CURVE AND A TURNOUT : 0 M
293. MINIMUM LENGTH OF TRACK BETWEEN A REVERSE CURVE AND A TURNOUT : 0 M
294. MINIMUM LENGTH OF TRACK BETWEEN TWO TURNOUTS : 0 M
295. MINIMUM LENGTH OF TRACK BETWEEN A SIMPLE CURVE AND A TURNOUT : 0 M
296. MINIMUM LENGTH OF TRACK BETWEEN A REVERSE CURVE AND A TURNOUT : 0 M
297. MINIMUM LENGTH OF TRACK BETWEEN TWO TURNOUTS : 0 M
298. MINIMUM LENGTH OF TRACK BETWEEN A SIMPLE CURVE AND A TURNOUT : 0 M
299. MINIMUM LENGTH OF TRACK BETWEEN A REVERSE CURVE AND A TURNOUT : 0 M
300. MINIMUM LENGTH OF TRACK BETWEEN TWO TURNOUTS : 0 M
301. MINIMUM LENGTH OF TRACK BETWEEN A SIMPLE CURVE AND A TURNOUT : 0 M
302. MINIMUM LENGTH OF TRACK BETWEEN A REVERSE CURVE AND A TURNOUT : 0 M
303. MINIMUM LENGTH OF TRACK BETWEEN TWO TURNOUTS : 0 M
304. MINIMUM LENGTH OF TRACK BETWEEN A SIMPLE CURVE AND A TURNOUT : 0 M
305. MINIMUM LENGTH OF TRACK BETWEEN A REVERSE CURVE AND A TURNOUT : 0 M
306. MINIMUM LENGTH OF TRACK BETWEEN TWO TURNOUTS : 0 M
307. MINIMUM LENGTH OF TRACK BETWEEN A SIMPLE CURVE AND A TURNOUT : 0 M
308. MINIMUM LENGTH OF TRACK BETWEEN A REVERSE CURVE AND A TURNOUT : 0 M
309. MINIMUM LENGTH OF TRACK BETWEEN TWO TURNOUTS : 0 M
310. MINIMUM LENGTH OF TRACK BETWEEN A SIMPLE CURVE AND A TURNOUT : 0 M
311. MINIMUM LENGTH OF TRACK BETWEEN A REVERSE CURVE AND A TURNOUT : 0 M
312. MINIMUM LENGTH OF TRACK BETWEEN TWO TURNOUTS : 0 M
313. MINIMUM LENGTH OF TRACK BETWEEN A SIMPLE CURVE AND A TURNOUT : 0 M
314. MINIMUM LENGTH OF TRACK BETWEEN A REVERSE CURVE AND A TURNOUT : 0 M
315. MINIMUM LENGTH OF TRACK BETWEEN TWO TURNOUTS : 0 M
316. MINIMUM LENGTH OF TRACK BETWEEN A SIMPLE CURVE AND A TURNOUT : 0 M
317. MINIMUM LENGTH OF TRACK BETWEEN A REVERSE CURVE AND A TURNOUT : 0 M
318. MINIMUM LENGTH OF TRACK BETWEEN TWO TURNOUTS : 0 M
319. MINIMUM LENGTH OF TRACK BETWEEN A SIMPLE CURVE AND A TURNOUT : 0 M
320. MINIMUM LENGTH OF TRACK BETWEEN A REVERSE CURVE AND A TURNOUT : 0 M
321. MINIMUM LENGTH OF TRACK BETWEEN TWO TURNOUTS : 0 M
322. MINIMUM LENGTH OF TRACK BETWEEN A SIMPLE CURVE AND A TURNOUT : 0 M
323. MINIMUM LENGTH OF TRACK BETWEEN A REVERSE CURVE AND A TURNOUT : 0 M
324. MINIMUM LENGTH OF TRACK BETWEEN TWO TURNOUTS : 0 M
325. MINIMUM LENGTH OF TRACK BETWEEN A SIMPLE CURVE AND A TURNOUT : 0 M
326. MINIMUM LENGTH OF TRACK BETWEEN A REVERSE CURVE AND A TURNOUT : 0 M
327. MINIMUM LENGTH OF

GC/HORC		HRIDC	
NAME / DESIGNATION	SIGN	NAME / DESIGNATION	SIGN
CHAHATEY RAM PD		VISHAL GUPTA CPM/ NORTH	
SUDHIR AGRAWAL DPD/CIVIL		DGM/CIVIL	
A.S. JANGHU CRE/ELECT.		AM/S&T	
STIPHEN SAHOO SRE/ELECT.			

LEGEND:
- EXISTING RAILWAY TRACK
- PROPOSED UP & DN LINE
- DISMANTLING WORKS
- PROPOSED DIVERSIONS
- EXISTING ROAD
- PRO HORC BOUNDARY
- EXPRESSWAY BOUNDARY
- HT LINE
- ELECTRICAL LINE(LT)
- STREAM / CANAL / DRAIN
- WELL
- POND

F/CSB-FROM CENTER LINE OF STN BLDG	RH - RIGHT HANDED
TP1 & TP2 - TANGENT POINT	LH - LEFT HANDED
R - RADIUS	FM - FOULING MARK
CCL - CIRCULAR CURVE LENGTH	SRJ - STOCK RAIL JOINT
TL - TANGENT LENGTH	TS - TRAP SWITCH
TR - TRANSITION LENGTH	DE - DEAD END
SE - SUPERELEVATION	Rr - RESULTANT RADIUS
Δ - DEFLECTION ANGLE	D - DEGREE OF CURVE
CSR - CLEAR STANDING ROOM	RH - RELAY HUT
SSP - SUB SECTIONING & PARALLING POST	

NOTE:

1. ALL DIMENSIONS ARE SHOWN IN METRES.
2. CH:0.00 IS RECKONED AS C.L OF STATION BUILDING.
3. THROUGH CHAINAGES ARE RECKONED FROM C.L OF PRITHALA STATION.
4. RULING GRADIENT FOR PRITHALA TO HARSANA KALAN SECTION IS 1 IN 150 COMPENSATED.
5. EI/SSI WITH STD. - IIIR DISTRIBUTED INTERLOCKING AND MACL SIGNALING SYSTEM SHALL BE PROVIDED.
6. ALL MAIN LINE POINTS & CROSSINGS ARE TO BE LAID WITH 60 Kg, 1 IN 12 THICK WEB SWITCH WITH WELDABLE CMS CROSSING.
7. TRACK STRUCTURE OF ALL NEW / REPLACEMENT OF LINES SHALL BE WITH 60 Kg RAILS ON WIDE BASE PSC SLEEPERS AT :
   SLEEPER DENSITY OF 1660 Nos/Km & BALLAST CUSHION 350 mm FOR MAIN LINE,
   SLEEPER DENSITY OF 1540 Nos/Km & BALLAST CUSHION 250 MM FOR LOOP LINE.

PROPOSED TRACK STRUCTURE (TO SUIT FOR 25T AXLE LOAD

I. FOR RAIL CORRIDOR: 160KMPH Speed
- * TRACK = 60KG RAILS
- * SLEEPER DENSITY : PSC SLEEPERS = 1660 No.S PER KM
- * BALLAST CUSHION : 350mm
- * ALL TURNOUTS ARE 1 in 12 UNLESS OTHERWISE SPECIFIED.

PROJECT: HARYANA ORBITAL RAIL CORRIDOR
CONNECTING PALWAL TO SONIPAT BYPASSING DELHI AREA BY LINKING ASAOTI-PATLI-SULTANPUR-ASAUDAH BY NEW ELECTRIFIED BG DOUBLE LINE

CLIENT: HARYANA RAIL INFRASTRUCTURE DEVELOPMENT CORPORATION LIMITED.

GENERAL CONSULTANT: GENERAL CONSULTANT FOR HARYANA ORBITAL RAIL CORRIDOR
RITES Limited in consortium with SMEC International Pty. Ltd.

TITLE : CONCEPTUAL ENGINEERING SCALE PLAN NEW ASAUDAH STATION CH:94031.161m F/PRITHALA

GC DRG.NO.: GC-HRIDC-C6-DRW-STN-ESP-NAS01_A0

ISSUED Dt: 25.06.2023 | REVISED Dt:

CONSULTANTS : AARVEE ASSOCIATES
aarvee associates architects engineers & consultants pvt.ltd.
Ravula Residency, Srinagar Colony Main Rd., Hyderabad-82, India
Tel: 91-40-23737633; Fax: 91-40-23736277
e-mail: railways@aarvee.net; web:www.aarvee.net

MANISHA (AM CAD) DRAWN	G.PRASAD (M) CHECKED	N.J. RAO (VP) APPROVED

DRG.NO.AA/RLY/2245/HRIDC/ESP-12/REV-4 | SHEET No. 1

SCALE : 1:1000 | ISSUED Dt: 26.11.2019 | REV Dt: 29-07-2022

LEGEND:

- EXISTING RAILWAY TRACK
- PROPOSED UP & DN LINE
- DISMANTLING WORKS
- PROPOSED DIVERSIONS
- EXISTING ROAD
- PRO.HORC BOUNDARY
- EXPRESSWAY BOUNDARY
- HT LINE
- ELECTRICAL LINE(LT)
- STREAM / CANAL / DRAIN
- WELL
- POND

F/CSB-FROM CENTER LINE OF STN BLDG	RH - RIGHT HANDED
TP1 & TP2 - TANGENT POINT	LH - LEFT HANDED
R - RADIUS	FM - FOULING MARK
CCL - CIRCULAR CURVE LENGTH	SRJ - STOCK RAIL JOINT
TL - TANGENT LENGTH	TS - TRAP SWITCH
TR - TRANSITION LENGTH	DE - DEAD END
SE - SUPERELEVATION	Rr - RESULTANT RADIUS
Δ - DEFLECTION ANGLE	D - DEGREE OF CURVE
CSR - CLEAR STANDING ROOM	RH - RELAY HUT
SSP - SUB SECTIONING & PARALLING POST	

NOTE:

1. ALL DIMENSIONS ARE SHOWN IN METRES.
2. CH:0.00 IS RECKONED AS C.L OF STATION BUILDING.
3. THROUGH CHAINAGES ARE RECKONED FROM C.L OF PRITHALA STATION.
4. RULING GRADIENT FOR PRITHALA TO HARSANA KALAN SECTION IS 1 IN 150 COMPENSATED.
5. ALL MAIN LINE POINTS & CROSSINGS ARE TO BE LAID WITH 60 Kg, 1 IN 12 THICK WEB SWITCH WITH WELDABLE CMS CROSSING.
6. TRACK STRUCTURE OF ALL NEW / REPLACEMENT OF LINES SHALL BE WITH 60 Kg RAILS ON WIDE BASE PSC SLEEPERS AT :
   SLEEPER DENSITY OF 1660 Nos/Km & BALLAST CUSHION 350 mm FOR MAIN LINE,
   SLEEPER DENSITY OF 1540 Nos/Km & BALLAST CUSHION 250 MM FOR LOOP LINE.

PROPOSED TRACK STRUCTURE (TO SUIT FOR 25T AXLE LOAD

I. FOR RAIL CORRIDOR: 160KMPH Speed
* TRACK = 60KG RAILS
* SLEEPER DENSITY : PSC SLEEPERS = 1660 No.S PER KM
* BALLAST CUSHION : 350mm
* ALL TURNOUTS ARE 1 in 12 UNLESS OTHERWISE SPECIFIED.

GC/HORC		HRIDC	
NAME / DESIGNATION	SIGN	NAME / DESIGNATION	SIGN
CHAHATEY RAM PD	[signature]	VISHAL GUPTA CPM/NORTH	
SUDHIR AGRAWAL DPD/CIVIL	[signature]		
A.S. JANGHU CRE/ELECT	[signature]	DGM/CIVIL	
STIPHEN SAHOO SRE/ELECT	[signature]	AM/S&T	

PROJECT:
HARYANA ORBITAL RAIL CORRIDOR
CONNECTING PALWAL TO SONIPAT BYPASSING DELHI AREA BY LINKING ASAOTI-PATLI-SULTANPUR-ASAUDAH BY NEW ELECTRIFIED BG DOUBLE LINE

CLIENT:
HARYANA RAIL INFRASTRUCTURE DEVELOPMENT CORPORATION LIMITED.

GENERAL CONSULTANT:
GENERAL CONSULTANT FOR HARYANA ORBITAL RAIL CORRIDOR
RITES Limited in consortium with SMEC International Pty. Ltd.

RITES THE INFRASTRUCTURE PEOPLE | SMEC Member of the Surbana Jurong Group

TITLE : CONCEPTUAL ENGINEERING SCALE PLAN
JASAUR KHERI STATION YARD CH:100228.880m F/ PRITHALA

GC DRG.NO.: GC-HRIDC-C6-DRW-STN-ESP-JSK01_A0

ISSUED Dt: 25.06.2023 | REVISED Dt:

CONSULTANTS :
aarvee associates
architects engineers & consultants pvt.ltd.
Ravula Residency, Srinagar Colony Main Rd., Hyderabad-82, India
Tel: 91-40-23737633; Fax: 91-40-23736277
e-mail: railways@aarvee.net; web:www.aarvee.net

AARVEE ASSOCIATES

MANISHA (AM CAD) DRAWN	G.PRASAD (M) CHECKED	N.J. RAO (VP) APPROVED

DRG.NO.AA/RLY/2245/HRIDC/ESP-14/REV-4 | SHEET No. 1

LEGEND
EXISTING RAILWAY TRACK
PROPOSED RAILWAY LINE
DRAINAGE WORKS
EXISTING ROAD
EXISTING BUILDINGS
EXPRESSWAY BOUNDARY
RIVER
ELECTRICAL LINE(T)
ELECTRICAL POLE(P)
RAIL
ROAD
RH : RIGHT HANDED
LH : LEFT HANDED
FB : FOOT BRIDGE
VU : VEHICULAR UNDER PASS
TH : TRUE NORTH
TB : TRACK BALLAST
CL : CENTRE LINE OF TRACK
D : DEGREE OF CURVE
R : RADIUS (M)
NOTE:
1. DIMENSIONS ARE IN MM UNLESS OTHERWISE INDICATED.
2. ALL LEVELS ARE WITH REFERENCE TO RAIL TOP LEVEL.
3. ALL CHAINAGES ARE AS PER CENTRE LINE OF TRACK.
4. ALL BRIDGES ARE DESIGNED FOR 25T AXLE LOAD.
5. ALL BRIDGES ARE DESIGNED FOR 1 IN 100 YEARS FLOOD DISCHARGE.
6. ALL BRIDGES ARE DESIGNED FOR 1 IN 100 YEARS FLOOD DISCHARGE.
7. ALL BRIDGES ARE DESIGNED FOR 1 IN 100 YEARS FLOOD DISCHARGE.

LEGEND:
EXISTING RAILWAY TRACK
PROPOSED UP & DN LINE
DISMANTLING WORKS
PROPOSED DIVERSIONS
EXISTING ROAD
PRO-HORC BOUNDARY
EXPRESSWAY BOUNDARY
HT LINE
ELECTRICAL LINE(LT)
STREAM / CANAL / DRAIN
WELL
POND

F/CSB-FROM CENTER LINE OF STN BLDG	RH - RIGHT HANDED
TP1 & TP2 - TANGENT POINT	LH - LEFT HANDED
R - RADIUS	FM - FOULING MARK
CCL - CIRCULAR CURVE LENGTH	SRJ - STOCK RAIL JOINT
TL - TANGENT LENGTH	TS - TRAP SWITCH
TR - TRANSITION LENGTH	DE - DEAD END
SE - SUPERELEVATION	Rr - RESULTANT RADIUS
Δ - DEFLECTION ANGLE	D - DEGREE OF CURVE
CSR - CLEAR STANDING ROOM	RH - RELAY HUT
SSP - SUB SECTIONING & PARALLING POST	

NOTE:

1. ALL DIMENSIONS ARE SHOWN IN METRES.
2. CH:0.00 IS RECKONED AS C.L OF STATION BUILDING.
3. THROUGH CHAINAGES ARE RECKONED FROM C.L OF PRITHALA STATION.
4. RULING GRADIENT FOR PRITHALA TO HARSANA KALAN SECTION IS 1 IN 150 COMPENSATED.
5. EI/SSI WITH STD. - IIIR DISTRIBUTED INTERLOCKING AND MACL SIGNALING SYSTEM SHALL BE PROVIDED.
6. ALL MAIN LINE POINTS & CROSSINGS ARE TO BE LAID WITH 60 Kg, 1 IN 12 THICK WEB SWITCH WITH WELDABLE CMS CROSSING.
7. TRACK STRUCTURE OF ALL NEW / REPLACEMENT OF LINES SHALL BE WITH 60 Kg RAILS ON WIDE BASE PSC SLEEPERS AT :
SLEEPER DENSITY OF 1660 Nos/Km & BALLAST CUSHION 350 mm FOR MAIN LINE,
SLEEPER DENSITY OF 1540 Nos/Km & BALLAST CUSHION 250 MM FOR LOOP LINE.

PROPOSED TRACK STRUCTURE (TO SUIT FOR 25T AXLE LOAD

I. FOR RAIL CORRIDOR: 160KMPH Speed
* TRACK = 60KG RAILS
* SLEEPER DENSITY : PSC SLEEPERS = 1660 No.S PER KM
* BALLAST CUSHION : 350mm
* ALL TURNOUTS ARE 1 in 12 UNLESS OTHERWISE SPECIFIED.

CSR DETAILS FOR TARAKPUR YARD						
LINE NO	LINE NOTATION	START		END		TOTAL LENGTH OF CSR
LINE NO-1	LOOP LINE 1	SRJ	113833.900	SRJ	114603.900	770.0000
LINE NO-2	DN MAIN LINE	FM	113810.462	FM	114627.774	817.312
LINE NO-3	UP MAIN LINE	FM	113752.826	FM	114685.201	932.375
LINE NO-4	LOOP LINE 2	SRJ	113776.299	SRJ	114661.478	885.179

GC/HORC		HRIDC	
NAME / DESIGNATION	SIGN	NAME / DESIGNATION	SIGN
CHAHATEY RAM PD	Chahatey Ram 3/7/23	VISHAL GUPTA CPM/ NORTH	
SUDHIR AGRAWAL DPD/CIVIL	30/6	DGM/CIVIL	
A.S. JANGHU CRE/ELECT.	30.06.2023	AM/S&T	
STIPHEN SAHOO SRE/ELECT.	Stiphen 30.06.23		

PROJECT:
HARYANA ORBITAL RAIL CORRIDOR
CONNECTING PALWAL TO SONIPAT BYPASSING DELHI AREA BY LINKING ASAOTI-PATLI-SULTANPUR-ASAUDAH BY NEW ELECTRIFIED BG DOUBLE LINE

CLIENT:
HARYANA RAIL INFRASTRUCTURE DEVELOPMENT CORPORATION LIMITED.

GENERAL CONSULTANT:
GENERAL CONSULTANT FOR HARYANA ORBITAL RAIL CORRIDOR
RITES Limited in consortium with SMEC International Pty. Ltd.

RITES THE INFRASTRUCTURE PEOPLE
SMEC Member of the Surbana Jurong Group

TITLE : CONCEPTUAL ENGINEERING SCALE PLAN
TARAKPUR CROSSING STATION YARD CH:114218.885m F/PRITHALA

GC DRG.NO.: GC-HRIDC-C6-DRW-STN-ESP-TAR01_A0
ISSUED Dt: 25.06.2023
REVISED Dt:

CONSULTANTS : AARVEE ASSOCIATES
aarvee associates
architects engineers & consultants pvt.ltd.
Ravula Residency, Srinagar Colony Main Rd., Hyderabad-82, India
Tel: 91-40-23737633; Fax: 91-40-23736277
e-mail: railways@aarvee.net; web:www.aarvee.net

MANISHA (AM CAD) DRAWN | G.PRASAD (M) CHECKED | N.J. RAO (VP) APPROVED

DRG.NO.AA/RLY/2245/HRIDC/ESP-16/REV-4 SHEET No. 1
SCALE : 1:1000 ISSUED Dt: 26.11.2019 REV Dt: 29-07-2022

Proposed Development Plan

Legend

- Proposed Building
- Existing Building
- Proposed Road
- Existing Road
- Proposed Footpath
- Existing Footpath
- Proposed Boundary
- Existing Boundary
- Proposed Drain
- Existing Drain
- Proposed Electric Line
- Existing Electric Line
- Proposed Water Line
- Existing Water Line
- Proposed Sewer Line
- Existing Sewer Line
- Proposed Gas Line
- Existing Gas Line
- Proposed Telecom Line
- Existing Telecom Line
- Proposed Tree
- Existing Tree
- Proposed Pole
- Existing Pole
- Proposed Transformer
- Existing Transformer
- Proposed Manhole
- Existing Manhole
- Proposed Valve
- Existing Valve
- Proposed Hydrant
- Existing Hydrant
- Proposed Meter
- Existing Meter
- Proposed Gate
- Existing Gate
- Proposed Wall
- Existing Wall
- Proposed Fence
- Existing Fence
- Proposed Hedge
- Existing Hedge
- Proposed Grass
- Existing Grass
- Proposed Paved Area
- Existing Paved Area
- Proposed Unpaved Area
- Existing Unpaved Area
- Proposed Water Body
- Existing Water Body
- Proposed Stream
- Existing Stream
- Proposed Culvert
- Existing Culvert
- Proposed Bridge
- Existing Bridge
- Proposed Railway Line
- Existing Railway Line
- Proposed Railway Station
- Existing Railway Station
- Proposed Railway Platform
- Existing Railway Platform
- Proposed Railway Track
- Existing Railway Track
- Proposed Railway Signal
- Existing Railway Signal
- Proposed Railway Crossing
- Existing Railway Crossing
- Proposed Railway Bridge
- Existing Railway Bridge
- Proposed Railway Culvert
- Existing Railway Culvert
- Proposed Railway Station Building
- Existing Railway Station Building
- Proposed Railway Platform Shelter
- Existing Railway Platform Shelter
- Proposed Railway Platform Bench
- Existing Railway Platform Bench
- Proposed Railway Platform Dustbin
- Existing Railway Platform Dustbin
- Proposed Railway Platform Water Cooler
- Existing Railway Platform Water Cooler
- Proposed Railway Platform Toilet
- Existing Railway Platform Toilet
- Proposed Railway Platform Ramp
- Existing Railway Platform Ramp
- Proposed Railway Platform Staircase
- Existing Railway Platform Staircase
- Proposed Railway Platform Lift
- Existing Railway Platform Lift
- Proposed Railway Platform Escalator
- Existing Railway Platform Escalator
- Proposed Railway Platform Footbridge
- Existing Railway Platform Footbridge
- Proposed Railway Platform Subway
- Existing Railway Platform Subway
- Proposed Railway Platform Underpass
- Existing Railway Platform Underpass
- Proposed Railway Platform Overpass
- Existing Railway Platform Overpass
- Proposed Railway Platform Skywalk
- Existing Railway Platform Skywalk
- Proposed Railway Platform Pedestrian Bridge
- Existing Railway Platform Pedestrian Bridge
- Proposed Railway Platform Vehicular Bridge
- Existing Railway Platform Vehicular Bridge
- Proposed Railway Platform Level Crossing
- Existing Railway Platform Level Crossing
- Proposed Railway Platform Gate
- Existing Railway Platform Gate
- Proposed Railway Platform Boundary Wall
- Existing Railway Platform Boundary Wall
- Proposed Railway Platform Fence
- Existing Railway Platform Fence
- Proposed Railway Platform Hedge
- Existing Railway Platform Hedge
- Proposed Railway Platform Grass
- Existing Railway Platform Grass
- Proposed Railway Platform Paved Area
- Existing Railway Platform Paved Area
- Proposed Railway Platform Unpaved Area
- Existing Railway Platform Unpaved Area
- Proposed Railway Platform Water Body
- Existing Railway Platform Water Body
- Proposed Railway Platform Stream
- Existing Railway Platform Stream
- Proposed Railway Platform Culvert
- Existing Railway Platform Culvert
- Proposed Railway Platform Bridge
- Existing Railway Platform Bridge

Notes

1. All dimensions are in meters unless otherwise stated.
2. All levels are in meters above mean sea level.
3. All coordinates are in WGS 84.
4. All boundaries are approximate.
5. All existing features are shown as per survey.
6. All proposed features are shown as per design.
7. All trees to be retained are shown as per survey.
8. All trees to be removed are shown as per survey.
9. All trees to be planted are shown as per design.
10. All utilities are shown as per survey.
11. All utilities to be relocated are shown as per design.
12. All utilities to be installed are shown as per design.
13. All drains are shown as per survey.
14. All drains to be relocated are shown as per design.
15. All drains to be installed are shown as per design.
16. All roads are shown as per survey.
17. All roads to be widened are shown as per design.
18. All roads to be constructed are shown as per design.
19. All footpaths are shown as per survey.
20. All footpaths to be widened are shown as per design.
21. All footpaths to be constructed are shown as per design.
22. All railway lines are shown as per survey.
23. All railway lines to be relocated are shown as per design.
24. All railway lines to be installed are shown as per design.
25. All railway stations are shown as per survey.
26. All railway stations to be relocated are shown as per design.
27. All railway stations to be constructed are shown as per design.
28. All railway platforms are shown as per survey.
29. All railway platforms to be relocated are shown as per design.
30. All railway platforms to be constructed are shown as per design.
31. All railway tracks are shown as per survey.
32. All railway tracks to be relocated are shown as per design.
33. All railway tracks to be installed are shown as per design.
34. All railway signals are shown as per survey.
35. All railway signals to be relocated are shown as per design.
36. All railway signals to be installed are shown as per design.
37. All railway crossings are shown as per survey.
38. All railway crossings to be relocated are shown as per design.
39. All railway crossings to be installed are shown as per design.
40. All railway bridges are shown as per survey.
41. All railway bridges to be relocated are shown as per design.
42. All railway bridges to be constructed are shown as per design.
43. All railway culverts are shown as per survey.
44. All railway culverts to be relocated are shown as per design.
45. All railway culverts to be constructed are shown as per design.
46. All railway station buildings are shown as per survey.
47. All railway station buildings to be relocated are shown as per design.
48. All railway station buildings to be constructed are shown as per design.
49. All railway platform shelters are shown as per survey.
50. All railway platform shelters to be relocated are shown as per design.
51. All railway platform shelters to be constructed are shown as per design.
52. All railway platform benches are shown as per survey.
53. All railway platform benches to be relocated are shown as per design.
54. All railway platform benches to be installed are shown as per design.
55. All railway platform dustbins are shown as per survey.
56. All railway platform dustbins to be relocated are shown as per design.
57. All railway platform dustbins to be installed are shown as per design.
58. All railway platform water coolers are shown as per survey.
59. All railway platform water coolers to be relocated are shown as per design.
60. All railway platform water coolers to be installed are shown as per design.
61. All railway platform toilets are shown as per survey.
62. All railway platform toilets to be relocated are shown as per design.
63. All railway platform toilets to be constructed are shown as per design.
64. All railway platform ramps are shown as per survey.
65. All railway platform ramps to be relocated are shown as per design.
66. All railway platform ramps to be constructed are shown as per design.
67. All railway platform staircases are shown as per survey.
68. All railway platform staircases to be relocated are shown as per design.
69. All railway platform staircases to be constructed are shown as per design.
70. All railway platform lifts are shown as per survey.
71. All railway platform lifts to be relocated are shown as per design.
72. All railway platform lifts to be installed are shown as per design.
73. All railway platform escalators are shown as per survey.
74. All railway platform escalators to be relocated are shown as per design.
75. All railway platform escalators to be installed are shown as per design.
76. All railway platform footbridges are shown as per survey.
77. All railway platform footbridges to be relocated are shown as per design.
78. All railway platform footbridges to be constructed are shown as per design.
79. All railway platform subways are shown as per survey.
80. All railway platform subways to be relocated are shown as per design.
81. All railway platform subways to be constructed are shown as per design.
82. All railway platform underpasses are shown as per survey.
83. All railway platform underpasses to be relocated are shown as per design.
84. All railway platform underpasses to be constructed are shown as per design.
85. All railway platform overpasses are shown as per survey.
86. All railway platform overpasses to be relocated are shown as per design.
87. All railway platform overpasses to be constructed are shown as per design.
88. All railway platform skywalks are shown as per survey.
89. All railway platform skywalks to be relocated are shown as per design.
90. All railway platform skywalks to be constructed are shown as per design.
91. All railway platform pedestrian bridges are shown as per survey.
92. All railway platform pedestrian bridges to be relocated are shown as per design.
93. All railway platform pedestrian bridges to be constructed are shown as per design.
94. All railway platform vehicular bridges are shown as per survey.
95. All railway platform vehicular bridges to be relocated are shown as per design.
96. All railway platform vehicular bridges to be constructed are shown as per design.
97. All railway platform level crossings are shown as per survey.
98. All railway platform level crossings to be relocated are shown as per design.
99. All railway platform level crossings to be constructed are shown as per design.
100. All railway platform gates are shown as per survey.
101. All railway platform gates to be relocated are shown as per design.
102. All railway platform gates to be installed are shown as per design.
103. All railway platform boundary walls are shown as per survey.
104. All railway platform boundary walls to be relocated are shown as per design.
105. All railway platform boundary walls to be constructed are shown as per design.
106. All railway platform fences are shown as per survey.
107. All railway platform fences to be relocated are shown as per design.
108. All railway platform fences to be installed are shown as per design.
109. All railway platform hedges are shown as per survey.
110. All railway platform hedges to be relocated are shown as per design.
111. All railway platform hedges to be planted are shown as per design.
112. All railway platform grass areas are shown as per survey.
113. All railway platform grass areas to be relocated are shown as per design.
114. All railway platform grass areas to be laid are shown as per design.
115. All railway platform paved areas are shown as per survey.
116. All railway platform paved areas to be relocated are shown as per design.
117. All railway platform paved areas to be laid are shown as per design.
118. All railway platform unpaved areas are shown as per survey.
119. All railway platform unpaved areas to be relocated are shown as per design.
120. All railway platform unpaved areas to be laid are shown as per design.
121. All railway platform water bodies are shown as per survey.
122. All railway platform water bodies to be relocated are shown as per design.
123. All railway platform water bodies to be constructed are shown as per design.
124. All railway platform streams are shown as per survey.
125. All railway platform streams to be relocated are shown as per design.
126. All railway platform streams to be constructed are shown as per design.
127. All railway platform culverts are shown as per survey.
128. All railway platform culverts to be relocated are shown as per design.
129. All railway platform culverts to be constructed are shown as per design.
130. All railway platform bridges are shown as per survey.
131. All railway platform bridges to be relocated are shown as per design.
132. All railway platform bridges to be constructed are shown as per design.

Key Plan

Location Map

Project Details

Project Name	Proposed Development Plan
Project Location	[Location]
Project Area	[Area]
Project Type	[Type]
Project Status	[Status]
Project Start Date	[Start Date]
Project End Date	[End Date]
Project Duration	[Duration]
Project Cost	[Cost]
Project Funding	[Funding]
Project Implementing Agency	[Agency]
Project Consultant	[Consultant]
Project Contractor	[Contractor]
Project Supervisor	[Supervisor]
Project Manager	[Manager]
Project Engineer	[Engineer]
Project Architect	[Architect]
Project Surveyor	[Surveyor]
Project Geologist	[Geologist]
Project Hydrologist	[Hydrologist]
Project Environmentalist	[Environmentalist]
Project Sociologist	[Sociologist]
Project Economist	[Economist]
Project Lawyer	[Lawyer]
Project Accountant	[Accountant]
Project Auditor	[Auditor]
Project Evaluator	[Evaluator]
Project Monitor	[Monitor]
Project Reviewer	[Reviewer]
Project Approver	[Approver]
Project Sanctioner	[Sanctioner]
Project Inaugurator	[Inaugurator]
Project Foundation Stone Layer	[Foundation Stone Layer]
Project Chief Guest	[Chief Guest]
Project Guest of Honour	[Guest of Honour]
Project Special Guest	[Special Guest]
Project Invitee	[Invitee]
Project Attendee	[Attendee]
Project Speaker	[Speaker]
Project Moderator	[Moderator]
Project Anchor	[Anchor]
Project Vote of Thanks	[Vote of Thanks]
Project Refreshments	[Refreshments]
Project Lunch	[Lunch]
Project Dinner	[Dinner]
Project Transport	[Transport]
Project Accommodation	[Accommodation]
Project Security	[Security]
Project Medical	[Medical]
Project Emergency	[Emergency]
Project Fire	[Fire]
Project Police	[Police]
Project Ambulance	[Ambulance]
Project Hospital	[Hospital]
Project Doctor	[Doctor]
Project Nurse	[Nurse]
Project Pharmacist	[Pharmacist]
Project Laboratory	[Laboratory]
Project Blood Bank	[Blood Bank]
Project Ambulance Service	[Ambulance Service]
Project Helpline	[Helpline]
Project Emergency Number	[Emergency Number]
Project Website	[Website]
Project Email	[Email]
Project Phone	[Phone]
Project Fax	[Fax]
Project Address	[Address]
Project City	[City]
Project State	[State]
Project Country	[Country]
Project Pincode	[Pincode]
Project Latitude	[Latitude]
Project Longitude	[Longitude]
Project Elevation	[Elevation]
Project Time Zone	[Time Zone]
Project Currency	[Currency]
Project Language	[Language]
Project Date Format	[Date Format]
Project Time Format	[Time Format]
Project Number Format	[Number Format]
Project Unit System	[Unit System]
Project Coordinate System	[Coordinate System]
Project Datum	[Datum]
Project Projection	[Projection]
Project Scale	[Scale]
Project Grid	[Grid]
Project Zone	[Zone]
Project Hemisphere	[Hemisphere]
Project Meridian	[Meridian]
Project Parallel	[Parallel]
Project Origin	[Origin]
Project False Easting	[False Easting]
Project False Northing	[False Northing]
Project Central Meridian	[Central Meridian]
Project Latitude of Origin	[Latitude of Origin]
Project Scale Factor	[Scale Factor]
Project Standard Parallel 1	[Standard Parallel 1]
Project Standard Parallel 2	[Standard Parallel 2]
Project Azimuth	[Azimuth]
Project Range	[Range]
Project Height	[Height]
Project Width	[Width]
Project Length	[Length]
Project Depth	[Depth]
Project Volume	[Volume]
Project Weight	[Weight]
Project Density	[Density]
Project Pressure	[Pressure]
Project Temperature	[Temperature]
Project Humidity	[Humidity]
Project Rainfall	[Rainfall]
Project Wind Speed	[Wind Speed]
Project Wind Direction	[Wind Direction]
Project Solar Radiation	[Solar Radiation]
Project Evaporation	[Evaporation]
Project Transpiration	[Transpiration]
Project Evapotranspiration	[Evapotranspiration]
Project Runoff	[Runoff]
Project Infiltration	[Infiltration]
Project Groundwater	[Groundwater]
Project Surface Water	[Surface Water]
Project Water Quality	[Water Quality]
Project Water Supply	[Water Supply]
Project Water Demand	[Water Demand]
Project Water Consumption	[Water Consumption]
Project Water Loss	[Water Loss]
Project Water Recycling	[Water Recycling]
Project Water Reuse	[Water Reuse]
Project Water Conservation	[Water Conservation]
Project Water Harvesting	[Water Harvesting]
Project Water Storage	[Water Storage]
Project Water Treatment	[Water Treatment]
Project Water Distribution	[Water Distribution]
Project Water Metering	[Water Metering]
Project Water Billing	[Water Billing]
Project Water Tariff	[Water Tariff]
Project Water Subsidy	[Water Subsidy]
Project Water Rights	[Water Rights]
Project Water Allocation	[Water Allocation]
Project Water Permit	[Water Permit]
Project Water Licence	[Water Licence]
Project Water Agreement	[Water Agreement]
Project Water Treaty	[Water Treaty]
Project Water Dispute	[Water Dispute]
Project Water Litigation	[Water Litigation]
Project Water Arbitration	[Water Arbitration]
Project Water Mediation	[Water Mediation]
Project Water Negotiation	[Water Negotiation]
Project Water Consultation	[Water Consultation]
Project Water Participation	[Water Participation]
Project Water Governance	[Water Governance]
Project Water Management	[Water Management]
Project Water Policy	[Water Policy]
Project Water Law	[Water Law]
Project Water Regulation	[Water Regulation]
Project Water Standard	[Water Standard]
Project Water Guideline	[Water Guideline]
Project Water Code	[Water Code]
Project Water Manual	[Water Manual]
Project Water Handbook	[Water Handbook]
Project Water Report	[Water Report]
Project Water Publication	[Water Publication]
Project Water Research	[Water Research]
Project Water Study	[Water Study]
Project Water Survey	[Water Survey]
Project Water Assessment	[Water Assessment]
Project Water Evaluation	[Water Evaluation]
Project Water Monitoring	[Water Monitoring]
Project Water Modelling	[Water Modelling]
Project Water Forecasting	[Water Forecasting]
Project Water Planning	[Water Planning]
Project Water Design	[Water Design]
Project Water Construction	[Water Construction]
Project Water Operation	[Water Operation]
Project Water Maintenance	[Water Maintenance]
Project Water Rehabilitation	[Water Rehabilitation]
Project Water Upgradation	[Water Upgradation]
Project Water Expansion	[Water Expansion]
Project Water Augmentation	[Water Augmentation]
Project Water Conservation	[Water Conservation]
Project Water Harvesting	[Water Harvesting]
Project Water Storage	[Water Storage]
Project Water Treatment	[Water Treatment]
Project Water Distribution	[Water Distribution]
Project Water Metering	[Water Metering]
Project Water Billing	[Water Billing]
Project Water Tariff	[Water Tariff]
Project Water Subsidy	[Water Subsidy]
Project Water Rights	[Water Rights]
Project Water Allocation	[Water Allocation]
Project Water Permit	[Water Permit]
Project Water Licence	[Water Licence]
Project Water Agreement	[Water Agreement]
Project Water Treaty	[Water Treaty]
Project Water Dispute	[Water Dispute]
Project Water Litigation	[Water Litigation]
Project Water Arbitration	[Water Arbitration]
Project Water Mediation	[Water Mediation]
Project Water Negotiation	[Water Negotiation]
Project Water Consultation	[Water Consultation]
Project Water Participation	[Water Participation]
Project Water Governance	[Water Governance]
Project Water Management	[Water Management]
Project Water Policy	[Water Policy]
Project Water Law	[Water Law]
Project Water Regulation	[Water Regulation]
Project Water Standard	[Water Standard]
Project Water Guideline	[Water Guideline]
Project Water Code	[Water Code]
Project Water Manual	[Water Manual]
Project Water Handbook	[Water Handbook]
Project Water Report	[Water Report]
Project Water Publication	[Water Publication]
Project Water Research	[Water Research]
Project Water Study	[Water Study]
Project Water Survey	[Water Survey]
Project Water Assessment	[Water Assessment]
Project Water Evaluation	[Water Evaluation]
Project Water Monitoring	[Water Monitoring]
Project Water Modelling	[Water Modelling]
Project Water Forecasting	[Water Forecasting]
Project Water Planning	[Water Planning]
Project Water Design	[Water Design]
Project Water Construction	[Water Construction]
Project Water Operation	[Water Operation]
Project Water Maintenance	[Water Maintenance]
Project Water Rehabilitation	[Water Rehabilitation]
Project Water Upgradation	[Water Upgradation]
Project Water Expansion	[Water Expansion]
Project Water Augmentation	[Water Augmentation]

Signature

Signature of Author

Name: [Name]

Designation: [Designation]

Date: [Date]

Place: [Place]

Seal

Seal of Author

Approval

Approved by

Name: [Name]

Designation: [Designation]

Date: [Date]

Place: [Place]

Revision History

Revision No.	Date	Description	Author
1	[Date]	[Description]	[Author]
2	[Date]	[Description]	[Author]
3	[Date]	[Description]	[Author]
4	[Date]	[Description]	[Author]
5	[Date]	[Description]	[Author]
6	[Date]	[Description]	[Author]
7	[Date]	[Description]	[Author]
8	[Date]	[Description]	[Author]
9	[Date]	[Description]	[Author]
10	[Date]	[Description]	[Author]

Distribution List

Sr. No.	Name	Designation	Organization	Email	Phone
1	[Name]	[Designation]	[Organization]	[Email]	[Phone]
2	[Name]	[Designation]	[Organization]	[Email]	[Phone]
3	[Name]	[Designation]	[Organization]	[Email]	[Phone]
4	[Name]	[Designation]	[Organization]	[Email]	[Phone]
5	[Name]	[Designation]	[Organization]	[Email]	[Phone]
6	[Name]	[Designation]	[Organization]	[Email]	[Phone]
7	[Name]	[Designation]	[Organization]	[Email]	[Phone]
8	[Name]	[Designation]	[Organization]	[Email]	[Phone]
9	[Name]	[Designation]	[Organization]	[Email]	[Phone]
10	[Name]	[Designation]	[Organization]	[Email]	[Phone]

Abbreviations

Abbreviation	Full Form
[Abbreviation]	[Full Form]
[Abbreviation]	[Full Form]
[Abbreviation]	[Full Form]
[Abbreviation]	[Full Form]
[Abbreviation]	[Full Form]
[Abbreviation]	[Full Form]
[Abbreviation]	[Full Form]
[Abbreviation]	[Full Form]
[Abbreviation]	[Full Form]
[Abbreviation]	[Full Form]

References

1. [Reference]
2. [Reference]
3. [Reference]
4. [Reference]
5. [Reference]
6. [Reference]
7. [Reference]
8. [Reference]
9. [Reference]
10. [Reference]

Appendix

Appendix A

[Appendix A]

Appendix B

[Appendix B]

Appendix C

[Appendix C]

Appendix D

[Appendix D]

Appendix E

[Appendix E]

Appendix F

[Appendix F]

Appendix G

[Appendix G]

Appendix H

[Appendix H]

Appendix I

[Appendix I]

Appendix J

[Appendix J]

Index

[Index]

Glossary

Term	Definition
[Term]	[Definition]
[Term]	[Definition]
[Term]	[Definition]
[Term]	[Definition]
[Term]	[Definition]
[Term]	[Definition]
[Term]	[Definition]
[Term]	[Definition]
[Term]	[Definition]
[Term]	[Definition]

Bibliography

[Bibliography]

Table of Contents

[Table of Contents]

List of Figures

[List of Figures]

List of Tables

[List of Tables]

List of Abbreviations

[List of Abbreviations]

List of Symbols

[List of Symbols]

List of Appendices

[List of Appendices]

List of Annexures

[List of Annexures]

List of Plates

[List of Plates]

List of Maps

[List of Maps]

List of Charts

[List of Charts]

List of Graphs

[List of Graphs]

List of Photographs

[List of Photographs]

List of Drawings

[List of Drawings]

List of Schedules

[List of Schedules]

List of Forms

[List of Forms]

List of Certificates

[List of Certificates]

List of Agreements

[List of Agreements]

List of Contracts

[List of Contracts]

List of Bonds

[List of Bonds]

List of Guarantees

[List of Guarantees]

List of Insurances

[List of Insurances]

List of Permits

[List of Permits]

List of Licences

[List of Licences]

List of Approvals

[List of Approvals]

List of Clearances

[List of Clearances]

List of Sanctions

[List of Sanctions]

List of Orders

[List of Orders]

List of Notifications

[List of Notifications]

List of Circulars

[List of Circulars]

List of Memoranda

[List of Memoranda]

List of Minutes

[List of Minutes]

List of Resolutions

[List of Resolutions]

List of Decisions

[List of Decisions]

List of Recommendations

[List of Recommendations]

List of Suggestions

[List of Suggestions]

List of Comments

[List of Comments]

List of Queries

[List of Queries]

List of Replies

[List of Replies]

List of Objections

[List of Objections]

List of Appeals

[List of Appeals]

List of Petitions

[List of Petitions]

List of Representations

[List of Representations]

List of Submissions

[List of Submissions]

List of Applications

[List of Applications]

List of Proposals

[List of Proposals]

List of Schemes

[List of Schemes]

List of Projects

[List of Projects]

List of Programmes

[List of Programmes]

List of Plans

[List of Plans]

List of Policies

[List of Policies]

List of Laws

[List of Laws]

List of Regulations

[List of Regulations]

List of Standards

[List of Standards]

List of Guidelines

[List of Guidelines]

List of Codes

[List of Codes]

List of Manuals

[List of Manuals]

List of Handbooks

[List of Handbooks]

List of Reports

[List of Reports]

List of Publications

[List of Publications]

List of Research

[List of Research]

List of Studies

[List of Studies]

List of Surveys

[List of Surveys]

List of Assessments

[List of Assessments]

List of Evaluations

[List of Evaluations]

List of Monitoring

[List of Monitoring]

List of Modelling

[List of Modelling]

List of Forecasting

[List of Forecasting]

List of Planning

[List of Planning]

List of Design

[List of Design]

List of Construction

[List of Construction]

List of Operation

[List of Operation]

List of Maintenance

[List of Maintenance]

List of Rehabilitation

[List of Rehabilitation]

List of Upgradation

[List of Upgradation]

List of Expansion

[List of Expansion]

List of Augmentation

[List of Augmentation]

List of Conservation

[List of Conservation]

List of Harvesting

[List of Harvesting]

List of Storage

[List of Storage]

List of Treatment

[List of Treatment]

List of Distribution

[List of Distribution]

List of Metering

[List of Metering]

List of Billing

[List of Billing]

List of Tariff

[List of Tariff]

List of Subsidy

[List of Subsidy]

List of Rights

[List of Rights]

List of Allocation

[List of Allocation]

List of Permit

[List of Permit]

List of Licence

[List of Licence]

List of Agreement

[List of Agreement]

List of Treaty

[List of Treaty]

List of Dispute

[List of Dispute]

List of Litigation

[List of Litigation]

List of Arbitration

[List of Arbitration]

List of Mediation

[List of Mediation]

List of Negotiation

[List of Negotiation]

List of Consultation

[List of Consultation]

List of Participation

[List of Participation]

List of Governance

[List of Governance]

List of Management

[List of Management]

List of Policy

[List of Policy]

List of Law

[List of Law]

List of Regulation

[List of Regulation]

List of Standard

[List of Standard]

List of Guideline

[List of Guideline]

List of Code

[List of Code]

List of Manual

[List of Manual]

List of Handbook

[List of Handbook]

List of Report

[List of Report]

List of Publication

[List of Publication]

List of Research

[List of Research]

List of Study

[List of Study]

List of Survey

[List of Survey]

List of Assessment

[List of Assessment]

List of Evaluation

[List of Evaluation]

List of Monitoring

[List of Monitoring]

List of Modelling

[List of Modelling]

List of Forecasting

[List of Forecasting]

List of Planning

[List of Planning]

List of Design

[List of Design]

List of Construction

[List of Construction]

List of Operation

[List of Operation]

List of Maintenance

[List of Maintenance]

List of Rehabilitation

[List of Rehabilitation]

List of Upgradation

[List of Upgradation]

List of Expansion

[List of Expansion]

List of Augmentation

[List of Augmentation]

List of Conservation

[List of Conservation]

List of Harvesting

[List of Harvesting]

List of Storage

[List of Storage]

List of Treatment

[List of Treatment]

List of Distribution

[List of Distribution]

List of Metering

[List of Metering]

List of Billing

[List of Billing]

List of Tariff

[List of Tariff]

List of Subsidy

[List of Subsidy]

List of Rights

[List of Rights]

List of Allocation

[List of Allocation]

List of Permit

[List of Permit]

List of Licence

[List of Licence]

List of Agreement

[List of Agreement]

List of Treaty

[List of Treaty]

List of Dispute

LEGEND:
EXISTING UNDER CONSTRUCTION
PROPOSED AT 4TH STAGE
PROPOSED AT 5TH STAGE
EXISTING
EXISTING BUILDING
HINDI BOOKISH
ENGLISH (CAPITAL)
ENGLISH (SMALL)
AREA
0 5 10 20
SCALE IN METRES
NOTES:
1. DIMENSIONS ARE SHOWN IN METRES.
2. EXISTING BUILDINGS ARE SHOWN THUS.
3. ALL LEVELS ARE WITH REFERENCE TO MEAN SEA LEVEL.
4. ALL DIMENSIONS ARE TO BE CHECKED AT SITE BEFORE EXECUTION.
5. ALL DIMENSIONS ARE IN METRES UNLESS OTHERWISE NOTED.
6. ALL DIMENSIONS ARE TO FACE OF WALL UNLESS OTHERWISE NOTED.
7. ALL DIMENSIONS ARE TO CENTRE LINE OF PIER/COLUMN UNLESS OTHERWISE NOTED.
8. ALL DIMENSIONS ARE TO CENTRE LINE OF PIER/COLUMN UNLESS OTHERWISE NOTED.
9. ALL DIMENSIONS ARE TO CENTRE LINE OF PIER/COLUMN UNLESS OTHERWISE NOTED.

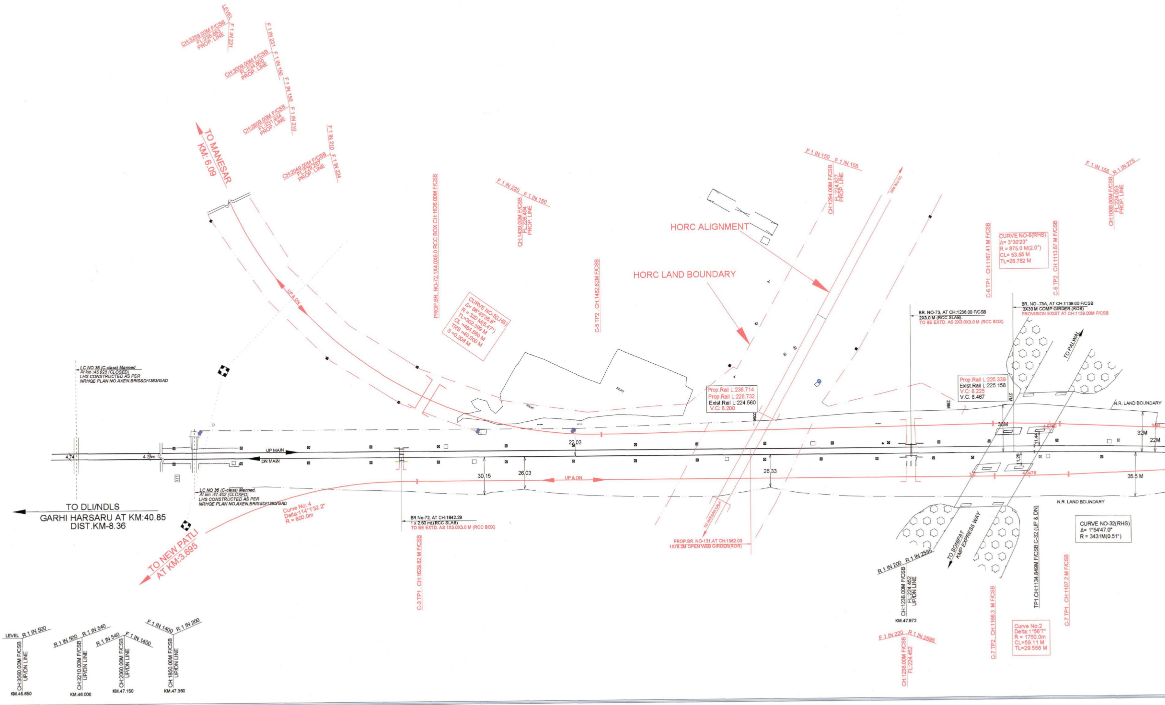
LEVEL
F 1 IN 231
CH:3259.00M F/CSB
FL:235.683
PROP. LINE
F 1 IN 231
F 1 IN 150
CH:3009.00M F/CSB
FL:234.600
PROP. LINE
F 1 IN 150
F 1 IN 210
CH:2609.00M F/CSB
FL:231.934
PROP. LINE
F 1 IN 210
F 1 IN 224
CH:2049.00M F/CSB
FL:229.267
PROP. LINE
TO MANESAR
KM: 6.09
UP & DN
PROP.BR. NO-72.1X4.0X6.0 RCC BOX.CH:1626.00M F/CSB
CURVE NO-5(LHS)
Δ= 86°45'36.8"
R = 320 M(5.47°)
TL=302.399 M
CL =484.560 M
TRS =40.000 M
S =0.208 M
F 1 IN 220
F 1 IN 150
CH:1439.00M F/CSB
FL:226.494
PROP. LINE
C-5 TP2 . CH:1482.62M F/CSB
HORC ALIGNMENT
HORC LAND BOUNDARY
F 1 IN 150
F 1 IN 155
CH:1294.00M F/CSB
FL:224.827
PROP. LINE
TO PALWAL
C-6 TP1 . CH:1167.41 M F/CSB
CURVE NO-6(RHS)
Δ= 3°30'23"
R = 875.0 M(2.0°)
CL= 53.55 M
TL=26.782 M
C-6 TP2 . CH:1113.87 M F/CSB
F 1 IN 155
R 1 IN 275
CH:1069.00M F/CSB
FL:224.053
PROP. LINE
BR. NO-73, AT CH:1236.00 F/CSB
2X3.0 M (RCC SLAB).
TO BE EXTD. AS 2X3.0X3.0 M (RCC BOX)
BR. NO -73A, AT CH:1139.00 F/CSB
3X30 M COMP GIRDER.(ROB)
PROVISION EXIST AT CH:1139.00M F/CSB
TO PALWAL
LC NO 35 (C-class) Manned
At km :45.925 (CLOSED)
LHS CONSTRUCTED AS PER
NRHQE PLAN NO.AXEN.BR/S&D/1383/GAD
Prop.Rail L:236.714
Prop.Rail L:226.732
Exist.Rail L:224.560
V.C: 8.200
22M
Prop.Rail L:225.339
Exist.Rail L:225.158
V.C: 8.225
V.C: 8.467
29M
27M
N.R. LAND BOUNDARY
38M
4.5760
32M
22M
4.74
4.75m
UP MAIN
DN MAIN
22.03
11.44
11.29
30.15
26.03
UP & DN
26.33
3.0
4.0476
35.5 M
N.R. LAND BOUNDARY
LC NO 36 (C-class) Manned
At km :47.402 (CLOSED)
LHS CONSTRUCTED AS PER
NRHQE PLAN NO.AXEN.BR/S&D/1385/GAD
TO DLI/NDLS
GARHI HARSARU AT KM:40.85
DIST.KM-8.36
Curve No: 4
Delta:114°1'32.2"
R = 600.0m
BR No-72, AT CH:1642.29
1 x 2.50 mt.(RCC SLAB)
TO BE EXTD. AS 1X3.0X3.0 M (RCC BOX)
TO HARSAN KALA
PROP.BR. NO-131.AT CH:1362.00
1X76.2M OPEN WEB GIRDER(ROR)
TO NEW PATLI
AT KM:3.695
C-3 TP1 . CH:1629.82 M F/CSB
R 1 IN 200
R 1 IN 2595
CH:1238.00M F/CSB
FL:224.452
UP/DN LINE
KM.47.972
TO SONIPAT
KMP EXPRESS WAY
TP1.CH:1134.849M F/CSB C-32 (UP & DN)
CURVE NO-32(RHS)
Δ= 1°54'47.0"
R = 3431M(0.51°)
C-7 TP1 . CH:1107.2 M F/CSB
F 1 IN 220
R 1 IN 2595
CH:1238.00M F/CSB
FL:224.452
C-7 TP2 . CH:1166.3 M F/CSB
Curve No:2
Delta:1°56'7"
R = 1750.0m
CL=59.11 M
TL=29.558 M
LEVEL
R 1 IN 500
CH:3560.00M F/CSB
UP/DN LINE
KM.45.650
R 1 IN 500
R 1 IN 540
CH:3210.00M F/CSB
UP/DN LINE
KM.46.000
R 1 IN 540
F 1 IN 1400
CH:2060.00M F/CSB
UP/DN LINE
KM.47.150
F 1 IN 1400
R 1 IN 200
CH:1850.00M F/CSB
UP/DN LINE
KM.47.360

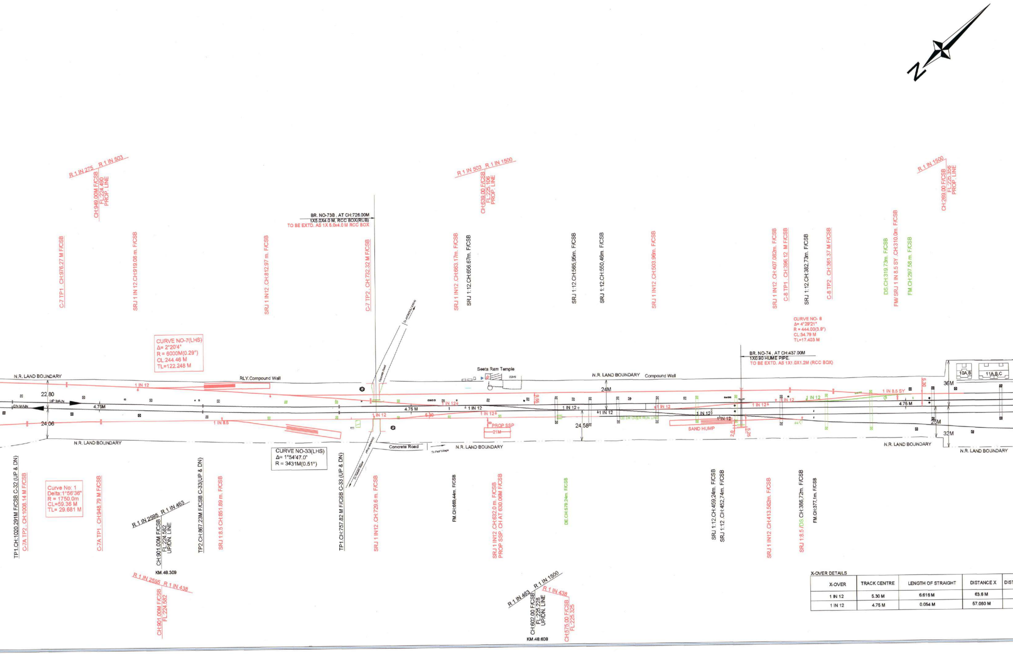
R 1 IN 275
R 1 IN 503
CH:949.00M F/CSB
FL:224.490
PROP. LINE
C-7 TP1 . CH:976.27 M F/CSB
SRJ 1 IN 12.CH:919.08 m. F/CSB
SRJ 1 IN12 .CH:812.97 m. F/CSB
BR. NO-73B . AT CH:726.00M
1X5.0X4.0 M. RCC BOX(RUB)
TO BE EXTD. AS 1X 5.0x4.0 M RCC BOX
C-7 TP2 . CH:732.32 M F/CSB
R 1 IN 503
R 1 IN 1500
CH:639.00 F/CSB
FL:225.106
PROP. LINE
SRJ 1 IN12 .CH:663.17m. F/CSB
SRJ 1:12.CH:656.67m. F/CSB
SRJ 1:12.CH:565,95m. F/CSB
SRJ 1:12.CH:550,46m. F/CSB
SRJ 1 IN12 .CH:503.96m. F/CSB
SRJ 1 IN12 .CH:407.082m. F/CSB
C-8 TP1 . CH:396.12 M F/CSB
SRJ 1:12.CH:382,73m. F/CSB
C-8 TP2 . CH:361.37 M F/CSB
DS.CH:319.73m. F/CSB
FM/ SRJ 1 IN 8.5 SY .CH:310.0m. F/CSB
FM.CH:297.58 m. F/CSB
R 1 IN 1500
CH:269.00 F/CSB
FL:225.356
PROP. LINE
CURVE NO-7(LHS)
Δ= 2°20'4"
R = 6000M(0.29°)
CL:244.46 M
TL=122.248 M
CURVE NO- 8
Δ= 4°29'21"
R = 444.00(3.9°)
CL:34.79 M
TL=17.403 M
BR. NO-74 . AT CH:437.00M
1X0.90 HUME PIPE.
TO BE EXTD. AS 1X1.0X1.2M (RCC BOX)
Seeta Ram Temple
N.R. LAND BOUNDARY
RLY.Compound Wall
N.R. LAND BOUNDARY
Compound Wall
10A,B
11A,B,C
22.80
UP MAIN
DN MAIN
24.06
4.75M
1 IN 12
1 IN 8.5
4.75 M
1 IN 12
1 IN 12
1 IN 12
1 IN 12
5.30
PROP SSP
21M
9.55
24M
1 IN 12
1 IN 12
24.58
1 IN 12
1 IN 12
1 IN 12
120.0M OVER RUN LINE
1 IN 12
SAND HUMP
2.0
5.25
1 IN 12
1 IN 12
1 IN 12
1 IN 8.5 SY
5.30
4.75 M
36M
25M
32M
N.R. LAND BOUNDARY
N.R. LAND BOUNDARY
N.R. LAND BOUNDARY
Concrete Road
Concrete Road
To Fesil Village
CURVE NO-33(LHS)
Δ= 1°54'47.0"
R = 3431M(0.51°)
TP1.CH:1020.291M F/CSB C-32 (UP & DN)
C-7A TP2 . CH:1008.14 M F/CSB
Curve No: 1
Delta:1°56'36"
R = 1750.0m
CL=59.36 M
TL= 29.681 M
C-7A TP1 . CH:948.79 M F/CSB
R 1 IN 2595
R 1 IN 463
CH:901.00M F/CSB
FL:224.582
UP/DN. LINE
KM.48.309
R 1 IN 2595
R 1 IN 438
CH:901.00M F/CSB
FL:224.582
TP2.CH:867.23M F/CSB C-33(UP & DN)
SRJ 1:8.5 CH:851.89 m. F/CSB
TP1.CH:757.82 M F/CSB C-33 (UP & DN)
SRJ 1 IN12 .CH:729.6 m. F/CSB
FM.CH:669,44m. F/CSB
SRJ 1 IN12 .CH:632.0 m. F/CSB
PROP SSP. CH AT 630.06M F/CSB
DE.CH:579.24m. F/CSB
R 1 IN 463
R 1 IN 1500
CH:602.00 F/CSB
FL:225.228
UP/DN. LINE
KM.48.608
R 1 IN 438
CH:575.00 F/CSB
FL:225.325
SRJ 1:12.CH:459,24m. F/CSB
SRJ 1:12 .CH:452,74m. F/CSB
SRJ 1 IN12 .CH:413.582m. F/CSB
SRJ 1:8.5 /DS CH:386,72m. F/CSB
FM.CH:377,1m. F/CSB
N

X-OVER DETAILS

X-OVER	TRACK CENTRE	LENGTH OF STRAIGHT	DISTANCE X	DIST
1 IN 12	5.30 M	6.616 M	63.6 M	
1 IN 12	4.75 M	0.054 M	57.080 M	

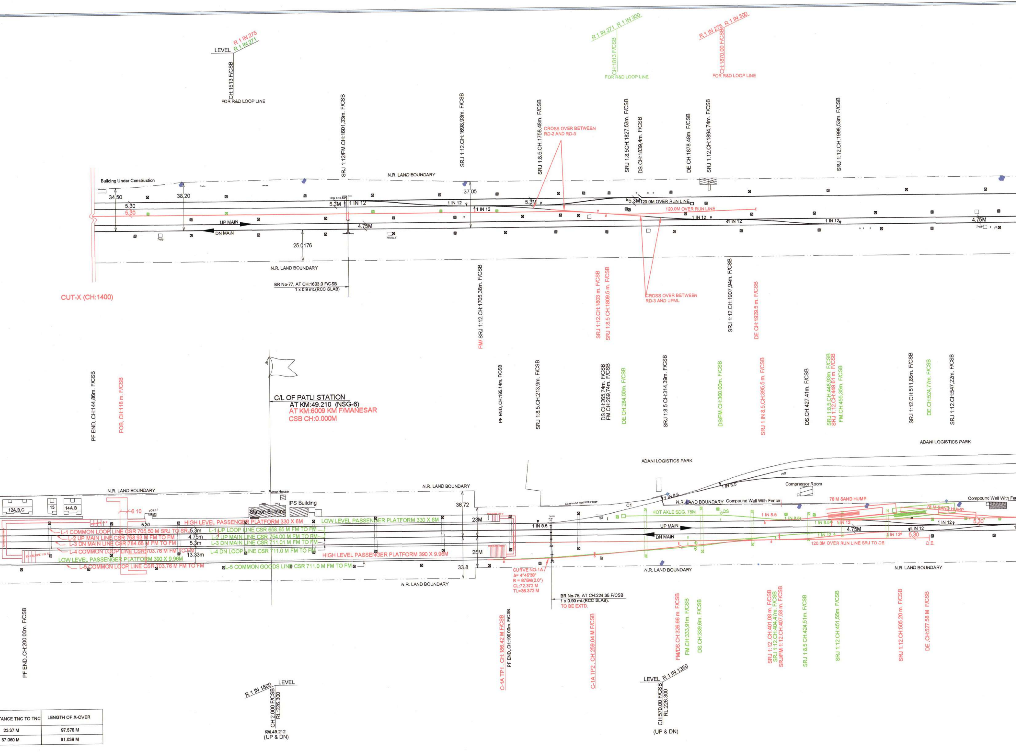
LEVEL
R 1 IN 275
R 1 IN 271
CH:1513 F/CSB
FOR R&D LOOP LINE
R 1 IN 271 R 1 IN 300
CH:1813 F/CSB
FOR R&D LOOP LINE
R 1 IN 275 R 1 IN 300
CH:1870.00 F/CSB
FOR R&D LOOP LINE
SRJ 1:12/FM.CH:1601.33m. F/CSB
SRJ 1:12.CH:1698.93m. F/CSB
SRJ 1:8.5.CH:1758.48m. F/CSB
CROSS OVER BETWEEN RD-2 AND RD-3
SRJ 1:8.5CH:1827.53m. F/CSB
DS.CH:1839.4m F/CSB
DE.CH:1878.48m. F/CSB
SRJ 1:12.CH:1894.74m. F/CSB
SRJ 1:12.CH:1998.53m. F/CSB
Building Under Construction
N.R. LAND BOUNDARY
34.50
38.20
37.05
5.30
5.30
5.3M
1 IN 12
1 IN 12
1 IN 12
5.3M
5.3M
20.0M OVER RUN LINE
120.0M OVER RUN LINE
1 IN 12
1 IN 12
1 IN 12
4.75M
UP MAIN
DN MAIN
4.75M
25.0176
N.R. LAND BOUNDARY
BR No-77, AT CH:1603.0 F/CSB
1 x 0.9 mt.(RCC SLAB)
CUT-X (CH:1400)
FM/ SRJ 1:12.CH:1705.38m. F/CSB
SRJ 1:12.CH:1803 m. F/CSB
SRJ 1:8.5 CH:1809.5 m. F/CSB
CROSS OVER BETWEEN RD-3 AND UPML
SRJ 1:12.CH:1907.94m. F/CSB
DE.CH:1929.5 m. F/CSB
PF END.CH:144.86m. F/CSB
FOB.CH:118 m. F/CSB
C/L OF PATLI STATION
AT KM:49.210 (NSG-6)
AT KM:6009 KM F/MANESAR
CSB CH:0.000M
PF END.CH:185.14m. F/CSB
SRJ 1:8.5.CH:213.9m. F/CSB
DS.CH:265.74m. F/CSB
FM.CH:269.74m. F/CSB
DE.CH:284.00m. F/CSB
SRJ 1:8.5.CH:314.39m. F/CSB
DS/FM.CH:360.00m. F/CSB
SRJ 1 IN 8.5.CH:395.5 m. F/CSB
DS.CH:427.41m. F/CSB
SRJ 1:8.5.CH:448.93m. F/CSB
SRJ 1:12.CH:449.61 m. F/CSB
FM.CH:455.35m. F/CSB
SRJ 1:12.CH:511.85m. F/CSB
DE.CH:524.77m. F/CSB
SRJ 1:12.CH:547.22m. F/CSB
ADANI LOGISTICS PARK
ADANI LOGISTICS PARK
N.R. LAND BOUNDARY
Pump House
12A,B,C
13
14A,B
6.10
TOILET
Station Building
IPS Building
N.R. LAND BOUNDARY
36.72
HIGH LEVEL PASSENGER PLATFORM 330 X 6M
LOW LEVEL PASSENGER PLATFORM 330 X 6M
5.30
L-1 COMMON LOOP LINE CSR 705.50 M SRJ TO SRJ
L-2 UP MAIN LINE CSR 758.93 M FM TO FM
L-3 DN MAIN LINE CSR 784.68 M FM TO FM
L-4 COMMON LOOP LINE CSR 703.76 M FM TO FM
LOW LEVEL PASSENGER PLATFORM 390 X 9.96M
L-5 COMMON LOOP LINE CSR 703.76 M FM TO FM
5.3m
4.75m
5.3m
13.33m
L-1 UP LOOP LINE CSR 658.65 M FM TO FM
L-2 UP MAIN LINE CSR 754.00 M FM TO FM
L-3 DN MAIN LINE CSR 711.01 M FM TO FM
L-4 DN LOOP LINE CSR 711.0 M FM TO FM
L-5 COMMON GOODS LINE CSR 711.0 M FM TO FM
HIGH LEVEL PASSENGER PLATFORM 390 X 9.96M
23M
25M
33.8
N.R. LAND BOUNDARY
1 IN 8.5
CURVE NO-1A
Δ= 4°45'38"
R = 875M(2.0°)
CL:72.372 M
TL=36.372 M
BR No-75, AT CH:224.35 F/CSB
1 x 0.90 mt.(RCC SLAB).
TO BE EXTD.
Compound Wall With Fence
C1
1 IN 8.5
1 IN 8.5
N.R. LAND BOUNDARY Compound Wall With Fence
Compressor Room
HOT AXLE SDG. 75M
DS
UP MAIN
DN MAIN
78 M SAND HUMP
78 M SAND HUMP
1 IN 8.5
1 IN 8.5
1 IN 8.5
1 IN 12
1 IN 12
4.75M
1 IN 12
1 IN 12
5.30
5.30
1 IN 12
120.0M OVER RUN LINE SRJ TO DE
D.E.
Compound Wall With Fe
N.R. LAND BOUNDARY
N.R. LAND BOUNDARY
PF END.CH:200.00m. F/CSB
R 1 IN 1500
LEVEL
CH:2.000 F/CSB
RL:226.300
KM.49.212
(UP & DN)
C-1A TP1 .CH:186.42 M F/CSB
PF END.CH:190.00m. F/CSB
C-1A TP2 .CH:259.04 M F/CSB
LEVEL R 1 IN 1350
CH:570.00 F/CSB
RL:226.300
(UP & DN)
FM/DS.CH:326.66 m. F/CSB
FM.CH:333.91m. F/CSB
DS.CH:339.6m. F/CSB
SRJ 1:12 .CH:401.08 m. F/CSB
SRJ 1:12.CH:404.47m. F/CSB
SRJ/FM 1:12.CH:407.58 m. F/CSB
SRJ 1:8.5 CH:424.51m. F/CSB
SRJ 1:12.CH:451.56m. F/CSB
SRJ 1:12.CH:505.20 m. F/CSB
DE .CH:527.58 M F/CSB

TANCE TNC TO TNC	LENGTH OF X-OVER
23.37 M	97.578 M
57.060 M	91.038 M

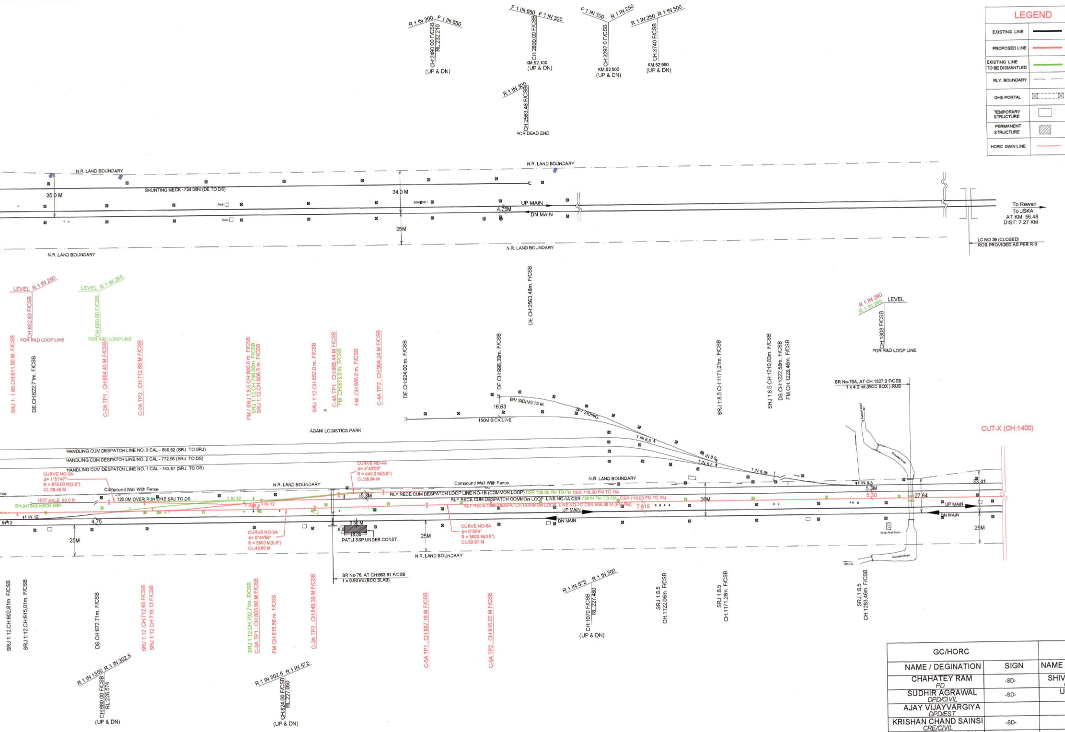
R 1 IN 300 F 1 IN 650
CH:2460.00 F/CSB
RL:232.210
(UP & DN)
F 1 IN 650 F 1 IN 300
CH:2890.00 F/CSB
KM.52.100
(UP & DN)
F 1 IN 300 R 1 IN 250
CH:3292.0 F/CSB
KM.52.502
(UP & DN)
R 1 IN 250 R 1 IN 500
CH:3740 F/CSB
KM.52.950
(UP & DN)
R 1 IN 300
CH:2563.48 F/CSB
FOR DEAD END
N.R. LAND BOUNDARY
35.0 M
SHUNTING NECK -724.08M (DE TO DS)
34.0 M
UP MAIN
4.75M
DN MAIN
25M
To Rewari
To JSKA
AT KM: 56.48
DIST: 7.27 KM
LC NO 39 (CLOSED)
ROB PROVIDED AS PER R-3
LEVEL R 1 IN 290
CH:652.63 F/CSB
FOR R&D LOOP LINE
LEVEL R 1 IN 265
CH:680.00 F/CSB
FOR R&D LOOP LINE
SRJ 1:1.85 CH:611.00 M. F/CSB
DE CH:622.7m. F/CSB
C-2A TP1 . CH:684.43 M F/CSB
C-2A TP2 . CH:712.88 M F/CSB
FM / SRJ 1:8.5 CH:800.0 m. F/CSB
SRJ 1:12 CH:799.00m. F/CSB
SRJ 1:12 CH:806.5 m. F/CSB
SRJ 1:12 CH:852.0 m. F/CSB
C-4A TP1 . CH:868.44 M F/CSB
FM . CH:873.0 m. F/CSB
FM . CH:885.0 m. F/CSB
C-4A TP2 . CH:904.24 M F/CSB
DE CH:924.00 m. F/CSB
DE CH:998.39m. F/CSB
DE CH:2563.48m. F/CSB
SRJ 1:8.5 CH:1171.21m. F/CSB
SRJ 1:8.5 CH:1210.83m. F/CSB
DS CH:1222.58m. F/CSB
FM CH:1228.46m. F/CSB
R 1 IN 290
R 1 IN 265
LEVEL
CH:1308 F/CSB
FOR R&D LOOP LINE
BR No-76A, AT CH:1327.0 F/CSB
1 x 4.0 mt.(RCC BOX.) RUB
B/V SIDING 75 M.
16.63
150M SICK LINE
B/V SIDING
ADANI LOGISTICS PARK
1 IN 8.5
1 IN 8.5
1 IN 8.5
1 IN 8.5
CUT-X (CH:1400)
HANDLING CUM DESPATCH LINE NO. 3 CAL - 856.82 (SRJ TO SRJ)
HANDLING CUM DESPATCH LINE NO. 2 CAL - 772.98 (SRJ TO DS)
HANDLING CUM DESPATCH LINE NO. 1 CAL - 743.87 (SRJ TO DS)
CURVE NO-2A
Δ= 1°51'47"
R = 875.00 M(2.0°)
CL:28.45 M
Compound Wall With Fence
HOT AXLE 50.0 M
SHUNTING NECK 50M
120.0M OVER RUN LINE SRJ TO DS
1 IN 12
1 IN 12
1 IN 8.5
1 IN 12
4.75
25M
N.R. LAND BOUNDARY
CURVE NO-4A
Δ= 4°40'03"
R = 440.0 M(3.9°)
CL:35.84 M
5.3M
RLY RECE CUM DESPATCH LOOP LINE NO-1B (COMMON LOOP) CSR 728.00 FM TO FM CSR 716.00 FM TO FM
RLY RECE CUM DESPATCH COMMON LOOP LINE NO-1A CSR 728 M FM TO FM CSR 716.00 FM TO FM
RLY RECE CUM DESPATCH COMMON LOOP LINE NO-1C CSR 905.38 M (FM-FM)
7.619
26M
UP MAIN
DN MAIN
CURVE NO-3A
Δ= 0°44'59"
R = 3500 M(0.5°)
CL:45.80 M
3.50 M
6.0
18.00
PATLI SSP UNDER CONST.
25M
CURVE NO-5A
Δ= 0°50'4"
R = 3500 M(0.5°)
CL:50.97 M
N.R. LAND BOUNDARY
BR No-76, AT CH:863.61 F/CSB
1 x 0.90 mt.(RCC SLAB).
1 IN 8.5
5.3M
5.30
27.64
33.41
UP MAIN
DN MAIN
25M
Gang Rest Room
Concrete Road
Concrete Road
SRJ 1:12 CH:602.81m. F/CSB
SRJ 1:12 CH:615.01m. F/CSB
DS CH:672.71m. F/CSB
SRJ 1:12 CH:712.63 F/CSB
SRJ 1:12 CH:719.13 F/CSB
SRJ 1:12 CH:792.71m. F/CSB
C-3A TP1 . CH:803.60 M F/CSB
FM CH:815.56 m. F/CSB
C-3A TP2 . CH:849.39 M F/CSB
C-5A TP1 . CH:887.18 M F/CSB
C-5A TP2 . CH:916.02 M F/CSB
R 1 IN 572 R 1 IN 300
CH:1070 F/CSB
RL:227.480
(UP & DN)
SRJ 1:8.5 CH:1122,06m. F/CSB
SRJ 1:8.5 CH:1171,28m. F/CSB
SRJ 1:8.5 CH:1283,46m. F/CSB
R 1 IN 1350 R 1 IN 302.5
CH:680.00 F/CSB
RL:226.574
(UP & DN)
R 1 IN 302.5 R 1 IN 572
CH:824.00 F/CSB
RL:227.060
(UP & DN)

LEGEND	
EXISTING LINE	▬
PROPOSED LINE	🟥
EXISTING LINE TO BE DISMANTLED	🟩
RLY. BOUNDARY	— · —
OHE PORTAL	☒- - - -☒
TEMPORARY STRUCTURE	☐
PERMANENT STRUCTURE	▨
HORC MAIN LINE	—

LEGEND	
NAME BOARD	I
TP	● ●
PT	⚲ ⚲
HAND PUMP(H.P)	↑
WIRE FENCE	—○—○—
DS, DE	⚲ [
OHE	☒
LAND TO BE REQUIRED	▨

N.R.H.Q.E. PLAN NO: DLI-08-07-2022

NOTES :-

1. ALL CHAINAGES ARE TAKEN FROM C.L OF PATLI STATION BUILDING AS 0.00 M .
2. ALL CHAINAGES AND LEVELS ARE IN METRES.
3. THIS DRAWING IS PREPARED BASED ON DATA COLLECTED FROM SITE & WILL SUPERSEDE DRG. NO. N.R.H.Q.E PLAN NO DLI/14/03-2007/R-3 (APPROVED ON 21.12.2018).ALL EXISTING DETAILS ARE AS PER EXISTING SITE FEATURES AND CONDITIONS.THE GRADIENTS ARE MARKED AS PER SITE SURVEY AND NO REGRADING IS PROPOSED.
4. TRACK CIRCUIT FIT FOR PSC SLEEPERS SHALL BE PROVIDED THROUGH OUT THE YARD INCLUDING 400 M FROM OUTER MOST PT ON EITHER END WITH GLUED INSULATED JOINTS AS REQUIRED BY THE S&T DEPT.
5. RULLING GRADIENT OF EXISTING IR LINE IS 1 IN 200 AND HORC LINE IS 1 IN 150.
6. STAGGERED GLUED JOINTS ARE TO BE PROVIDED FOR TOKEN LESS BLOCK WORKING SYSTEM.
7. LONG PSC SLEEPERS ARE TO BE PROVIDED FOR P&C TO FIX PT MACHINE.
8. TRACK STRUCTURE OF ALL NEW / REPLACEMENT OF LINES SHALL BE OF 60 KG RAILS ON 60 KG PSC SLEEPERS AND WITH SLEEPER DENSITY FOR MAIN LINE 1660 Nos/Km.BALLAST CUSHION 350 MM & FOR LOOP LINE 1540 Nos/Km. BALLAST CUSHION 250 MM
9. PRECAUTION OF OFC / SIGNALING CABLES SHOULD BE TAKEN DURING EXECUTION OF WORK.
10. OHE MASTS SHALL NOT BE LOCATED IN BETWEEN TRACKS WHEREVER TRACK CENTER IS LESS THAN 5.30 M.
11. EXISTING PASSENGER AMENITIES ARE TO BE MAINTAINED OR IMPROVED.
12. ALL EXISTING BRIDGES & OTHER STRUCTURES ARE EXACTLY AS PER FIELD SURVEY & ACCORDINGLY CHAINAGES ARE CORRECTED FROM CENTRE OF STATION BUILDING.
13. ALL LT/HT OVER HEAD/UNDERGROUND POWER LINE CROSSINGS ARE TO BE MODIFIED AS PER THE REGULATION FOR ELECT.TRACK CROSSING, WHERE EVER REQUIRED AS PER RB/RDSO/IRSOD.
14. THIS SUPERSESSION OF REVISION -3 IS DONE DUE TO CONSTRUCTION OF HORC's TWO CONNECTING LINES AT DELHI END AS PROPOSED, WHICH WILL BE CONECTED TO HORC LINE AT MANESAR & NEW PATLI STATION OF HORC.
15. RAILWAY BOUNDARY SHOWN IN THE ESP SHOULD NOT BE REFERRED FOR ISSUE / DISPUTES RELATED TO LAND.N.R BOUNDARY IS AS PER LAND PLAN WITH RESTORATION LABLE IS ***DD01262 AND DD01263.***
16. THERE IS REQUIREMENT OF EXTENSION OF BRIDGES FALLING IN THIS YARD.
17. ONE HOT AXLE SIDING IS THERE IN LINE NO1 (COMMON LOOP) AND ITS RELOCATION & MERGING WITH SHUNTING NECK IS PROPOSED TO INCREASE CSR OF LINE NO 1.
18. NOMENCLATURE OF COMMON GOODS LINE TO BE CHANGED AS COMMON LOOP LINE.
19. LEVEL CROSSING NO. 35 AND 38 HAVE BEEN CLOSED DUE TO CONSTRUCTION OF LHS AT KM 45.925 AND 47.402 RESPECTIVELY.
20. ***WORK SANCTIONED VIDE RAILWAY BOARD LETTER NO.2019/JV-CELL/HARYANA/PROJECT/06 DATED. 21.10.2020 &LETTER EVEN NO DATED.29.10.2020. (PINK BOOK 2022-23 ITEM NO.1194)***
21. ***PROVISION OF 6.1 M WIDE FOB(ref. PROPOSED & SHORTLISTED DELHI DIVISION PLAN HEAD NO.53),RAISING OF PLATFORM TO HIGH LEVEL (ref:PROCESSED BY DELHI DIVISION PLAN HEAD 53),SAND HUMP ON DLI END & OVERRUN ON RE END ISOLATION FOR LINE NO 4&5 WILL BE EXECUTED BY DIVISION'S.***
22. TRACK MACHINE SIDING IS PROVIDED AT MANESAR STATION ON HORC LINE AT ABOUT 6.0 KM AWAY.
23. REGRADING SHALL BE DONE BETWEEN CH 652.63 TO 1308.00 & 1513.0 TO 1870.00 FOR R&d LOOP LINE.
24. THE LAND ACQUISITION IF REQUIRED TO EXECUTE STANDARD LAYOUT OF SAND HUMP MAY BE DONE BY HRIDC AT CH.919.08, 448.93 & 611.00 M.
25. ROR IS AN OWG SPAN OF 76.2M WITH BOTH ABUTMENTS PLANNED OUTSIDE RAILWAY BOUNDARY AND KEEPING VERTICAL CLEARANCE AS PER SOD-04 OF HIGH RISE OHE
26. ALL SAND HUMPS SHALL BE CONSTRUCTED AS PER RDSO STANDARD DRAWING NO. T-347.

Signature block	
CE/P&D	SANJAY KUMAR SRIVASTAVA Digitally signed by SANJAY KUMAR SRIVASTAVA Date:2022.07.13 12:38:45 +05'30'
CTPM	SANJAY BAJPAI Digitally signed by SANJAY BAJPAI Date:2022.07.13 11:37:11 +05'30'
DRM-DLI	DIMPY GARG Digitally signed by DIMPY GARG Date:2022.06.14 07:04:41 +05'30'
ADRM-INFRA-DLI	ANUPUM SINGH Digitally signed by ANUPUM SINGH Date:2022.06.14 06:33:20 +05'30'
SRDEN-CO-DLI	AMIT KUMAR Digitally signed by AMIT KUMAR Date:2022.06.14 02:54:17 +05'30'
SRDOM- DLI	RAJNEESH KUMAR SRIVASTAVA Digitally signed by RAJNEESH KUMAR SRIVASTAVA Date:2022.06.10 02:39:58 +05'30'
SRDCM-DLI	Basant Kumar Digitally signed by Basant Kumar Date:2022.07.01 03:48:38 +05'30'
SRDSTE-DLI	ANURAG ANAND Digitally signed by ANURAG ANAND Date:2022.06.10 05:00:09 +05'30'
SRDME-CNW-DLI	ANANT KUMAR Digitally signed by ANANT KUMAR Date:2022.07.01 05:08:33 +05'30'
SRDEE-TRD-DLI	ATAMJEET SINGH Digitally signed by ATAMJEET SINGH Date:2022.06.13 02:07:10 +05'30'
SRDEN-5-DLI	SUMAN BALHARA Digitally signed by SUMAN BALHARA Date:2022.06.13 01:21:29 +05'30'
ADEN-DEE	JORA SINGH Digitally signed by JORA SINGH Date:2022.06.10 01:24:20 +05'30'

NORTHERN RAILWAY

DELHI DIVISION

PROJECT:

HARYANA ORBITAL RAIL CORRIDOR
CONNECTING PALWAL TO SONIPAT BYPASSING DELHI AREA BY LINKING ASAOTI-PATLI-SULTANPUR-ASAUDAH BY NEW ELECTRIFIED BG DOUBLE LINE

CLIENT:

HARYANA RAIL INFRASTRUCTURE DEVELOPMENT CORPORATION LIMITED.

GENERAL CONSULTANT:

GENERAL CONSULTANT FOR HARYANA ORBITAL RAIL CORRIDOR
RITES Limited in consortium with SMEC International Pty. Ltd.

RITES
THE INFRASTRUCTURE PEOPLE

SMEC
Member of the Surbana Jurong Group

SIGN

GC/HORC		HRIDC	
NAME / DEGINATION	SIGN	NAME / DEGINATION	SIGN
CHAHATEY RAM *PD*	-SD-	SHIV OM DWIVEDI *CPM/HRIDC*	-SD-
SUDHIR AGRAWAL *DPD/CIVIL*	-SD-	UMA.M.RAO *DGM/C-1*	-SD-
AJAY VIJAYVARGIYA *DPD/EST*		*DGM/S&T*	
KRISHAN CHAND SAINSI *CRE/CIVIL*	-SD-	*DGM/Elect.*	
AMARNATH SINGH *CRE/S&T*	-SD-		

GC/HORC DRG. NO:-	*GC-HRIDC-C2-DRW-ALN-ESP-001-A0*
DRAWING NAME	ESP OF PATLI STATION
N.R.H.Q.E. PLAN NO:	DLI-08-07-2022
DIVISION PLAN NO :	Y-4/PT/DLI/2022
SCALE	1:1000 1MM:1METRE 8 4 0 10 20 30 METRES 10 6 2
SMC DRG. NO:-	*SMC/HRIDC/PS/ESP/2 (R-5)*
CONSULTANT:	S.M. CONSULTANTS An ISO 9001 Company Bhubaneswar / Balasore / Secunderabad / South Andaman / New Delhi Web : www.smcindia.com , E-Mail : support@smcindia.com
DRAWN BY:- R.DAS	*CHECKED BY:-* A. A SAMANT

A. A. SAMANT
PROJECT INCHARGE

RELEASED FOR ☐ PRELIMINARY FOR APPROVAL ☑ TENDER ☐ CONSTRUCTION

NORTHERN RAILWAY

KAPURTHALA-I/U

BRIDGE-CC/U

BRIDGE-A/U

BRIDGE-T/U

BRIDGE-T1/C/U

BRIDGE-K/U

SSE (WORKS)/BRIDGE/JRL

SSE (WORKS)/BRIDGE/JRL/KPH

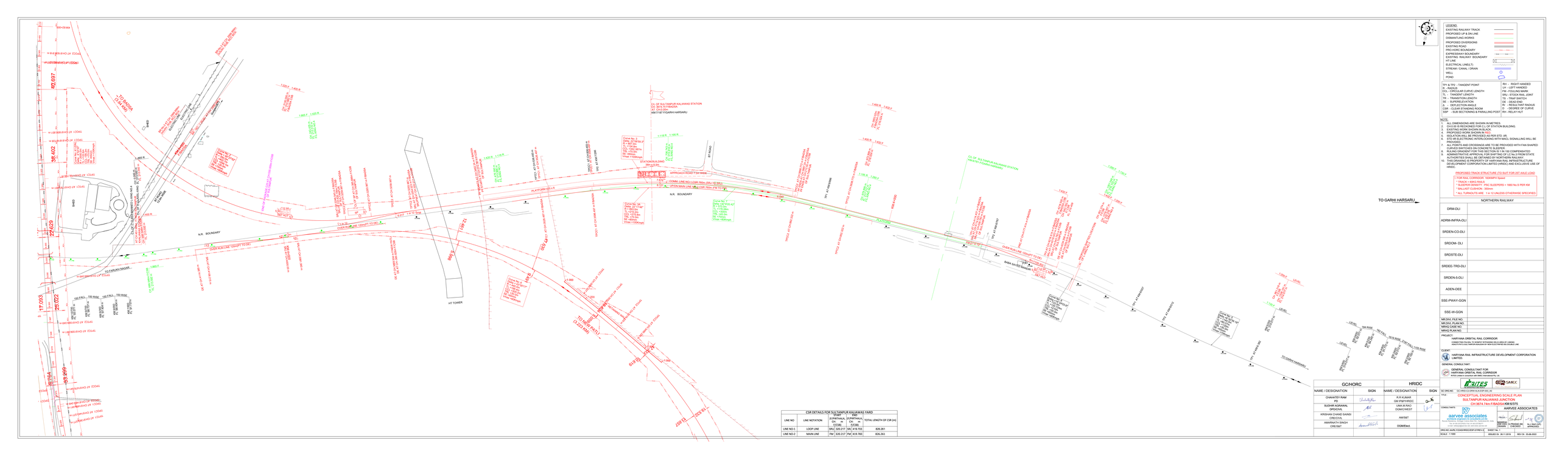
TO KARNAL
TO PANIPAT
TO GARHI HARSARU
TO SAMALKHA
TO KARNAL (1.23 KM PATH)
TO EARLIER NIGAM
TO GARHI HARSARU
CL OF SULTANPUR KALAWAS STATION
HARSARU GARHI HARSARU
CL OF SULTANPUR KALAWAS STATION
KM 0/187 FIGARH HARSARU
APPROACH ROAD 7.5m WIDE
STATION BUILDING
36m x 8.5m
PLATFORM 455 x 5
CONNI. LINE NO-1 CSR 760m (GRA) TO SRJ1
UPDN MAIN LINE NO-1 CSR 760m (FM TO RM)
UPDN MAIN LINE NO-2 CSR 760m (RM TO FM)
N.R. BOUNDARY
RAIL DIVIDED SIGNAL
KM 0/000
KM 0/400
KM 0/600
KM 0/800
KM 1/000
KM 1/200
KM 1/400
KM 1/600
KM 1/800
KM 2/000
KM 2/200
KM 2/400
KM 2/600
KM 2/800
KM 3/000
KM 3/200
KM 3/400
KM 3/600
KM 3/800
KM 4/000
KM 4/200
KM

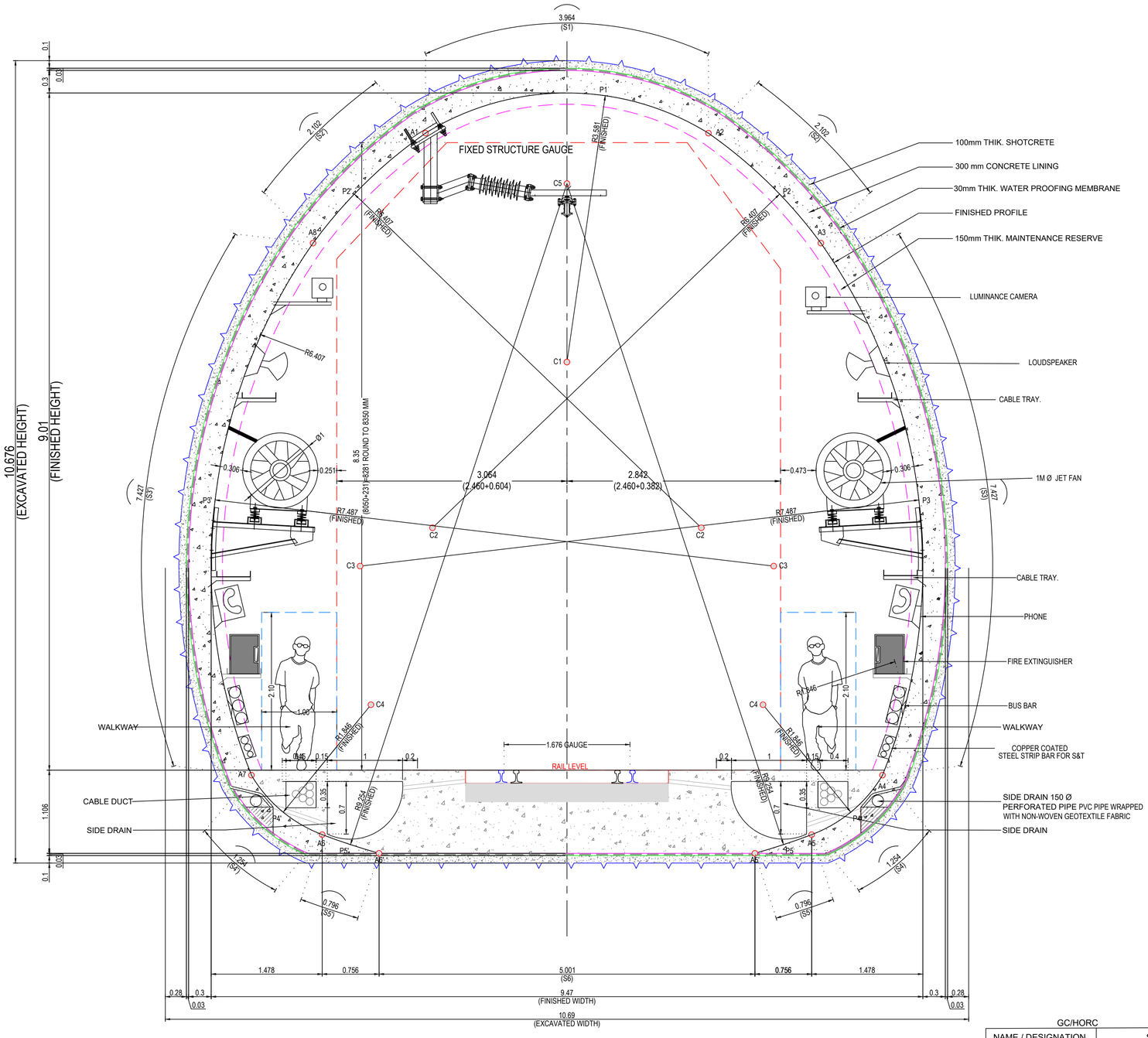

NOTES:-

1. ALL DIMENSIONS, NORTHING & EASTING AND LEVELS ARE IN METER, UNLESS OTHERWISE SPECIFIED.
2. NO DIMENSIONS SHALL BE MEASURED FROM DRAWING.
3. TUNNEL EXCAVATED BY HEADING AND BENCHING METHOD (NATM).
4. THE GRADE OF SHOTCRETE WITH SFRS AS PER DETAIL DESIGN.
5. NEAR PORTAL PULL LENGTH SHOULD BE LIMITED TO 500 MM, ONLY AFTER SUPPORTING EXCAVATED STRETCH (500 MM) ,THEN NEXT CYCLE OF EXCAVATION SHALL BE CARRIED OUT .
6. IT IS PROPOSED TO PROVIDE 50 MM THICK SFRS IMMEDIATELY AFTER EXCAVATION OF FACE .
7. IT IS PROPOSED TO PROVIDE 100 MM THICK SFRS ON SLOPE PROTECTION. ALTERNATIVELY, PLAIN SHOTCRETE WITH WIREMESH 150x150x5mm MAY ALSO BE USED.
8. PROPOSED ROCK BOLT SHALL BE WITH FOLLOWING SPECIFICATION CONFORMING TO IS 1786 ,DIAMETER OF ROCK BOLT =25 MM , GRADE OF ROCK BOLT Fe415 FULLY GROUTED ,SIZE OF ANCHOR PLATE =150X150X8MM
9. PROPOSED SUPPORT SYSTEM IS BASED ON GIR PROVIDED BY GEOLOGIST. ACTUAL SUPPORT SYSTEM MAY BE REVISED BASED ON ACTUAL RESPONSE OF STRATA DURING EXCAVATION.
10. THE NUT OF THE GROUTED ROCK BOLT SHALL BE TIGHTENED 12 HOURS AFTER INSTALLATION TO ACHIEVE A FORCE AT THE ANCHOR PLATE OF APPROX. 20KN. THIS FORCE SHALL BE APPLIED BY CALIBRATED TORQUE WRENCH.
11. THE LENGTH AND THE DIRECTION OF ROCK BOLTS MAY BE ALTERED IN CONSULTATION WITH SITE GEOLOGIST AND ENGINEER-IN-CHARGE. WHEREVER REQUIRED, ADDITIONAL SPOT BOLTING SHALL BE DONE IN LOCALIZED AREA OF POTENTIAL INSTABILITY OR WEAKNESS AS DETERMINED DURING EXCAVATION.
12. SLOPE SUPPORT SHALL BE INSTALLED AS EXCAVATION PROGRESSES SUCH THAT NOT MORE THAN 2.0m VERTICAL HEIGHT OF SLOPE IS LEFT UNSUPPORTED AT ANY TIME.
13. PULLOUT TEST SHALL BE CARRIED OUT ON ROCK BOLTS FOR 190KN. .
14. DRAINAGE PIPE SHALL BE 150mmØ, PERFORATED PVC PIPE WRAPPED WITH NON-WOVEN GEOTEXTILE FABRIC AS PER IS-4984.
15. EXCAVATION SEQUENCE WILL BE PROVIDED BASED ON GFC.
16. EXCAVATION AT EAST PORTAL LOCATION SHALL BE MATCHED WITH DEEP CUT EXCAVATION.
17. GUARD RAIL SHALL BE PROVIDED THROUGHOUT THE LENGTH OF BALLASTLESS TRACK.
18. BALLASTLESS TRACK TO BE DESIGN FOR 32.5 T AXLE LOADING.
19. DIMENSIONS OF PRIMARY SUPPORT & CONCRETE ARE TENTATIVE.
20. 230V SOCKET AT 200M INTERVAL FOR S&T SYSTEM SHALL BE PROVIDED.
21. SEPARATE EARTHING MET CONNECTION FOR S&T SYSTEM SHALL BE PROVIDED.
22. ANCHOR BOLT FOR ROCS SHALL BE INSTALLED DURING TUNNEL LINING.
23. CABLE CROSSING SHALL BE PROVIDED AT EVERY CROSS PASSAGE.
24. LUMINANCE CAMERA, LOUDSPEAKER, JET FAN, PHONE, BUS BAR, COPPER COATED STEEL STRIP BAR FOR S&T AND ROCS WORK (EXCLUDING ANCHOR BOLTS) IS NOT IN THE SCOPE OF WORK OF C-4.

S.N.	CURVE NAME	RADIUS (m.)	START	END	ARCH. LENGTH (m.)
1	S1	R3.581	A1	A2	3.964
2	S2	R6.407	A2	A3	2.102
3	S3	R7.487	A3	A4	7.427
4	S4	R1.846	A4	A5	1.254
5	S5	R9.254	A5	A5'	0.796
6	S6	R0	A5'	A6'	5.001
7	S5'	R9.254	A6'	A6	0.796
8	S4'	R1.846	A6	A7	1.254
9	S3'	R7.487	A7	A8	7.427
10	S2'	R6.407	A8	A1	2.102

EXCAVATED AREA	= 91.704 Sqm.
FINISHED AREA	= 71.063 Sqm.
EXCAVATED WIDTH	= 10.690m
EXCAVATED HEIGHT	= 10.676m
FINISHED WIDTH	= 9.470m
FINISHED HEIGHT	= 9.010m

GC/HORC		HRIDC	
NAME / DESIGNATION	SIGN	NAME / DESIGNATION	SIGN
CHAHATEY RAM *PD*		SHIV OM DWIVEDI *CPM/HRIDC*	
SUDHIR AGRAWAL *DPD/CIVIL*		RAJU SOLANKI *DGM/CIVIL/S*	
		AM/S&T	
REETU PATIAL *CDE /CIVIL*			
AMARNATH SINGH *CRE/S&T*		*AM/Civil/Plg.*	
STIPHEN SAHOO *SRE/Elect.*		*JGM/L&U*	

PROJECT:-

HARYANA ORBITAL RAIL CORRIDOR

CONNECTING PALWAL TO SONIPAT BYPASSING DELHI AREA BY LINKING ASAOTI-PATLI-SULTANPUR-ASAUDAH BY NEW ELECTRIFIED BG DOUBLE LINE

CLIENT:-

HARYANA RAIL INFRASTRUCTURE DEVELOPMENT CORPORATION LIMITED.

GENERAL CONSULTANT:

GENERAL CONSULTANT FOR HARYANA ORBITAL RAIL CORRIDOR

RITES Limited in consortium with SMEC International Pty. Ltd.

RITES THE INFRASTRUCTURE PEOPLE | SMEC Member of the Surbana Jurong Group

GC/HORC DRG. NO:- GC-HRIDC-C4-DRW-TTL-CLT-01001_A1

DRAWING NAME: CONCEPTUAL DRAWING FOR SINGLE TRACK TUNNEL CROSS SECTION (ROCK)

ISSUE DATE: 07.11.2022 | REVISED DATE: 03.01.2023

SCALE:- AS SHOWN.

SMC DRG. NO:- SMC/HRIDC/TUN/CS- 7

CONSULTANT: S.M. CONSULTANTS An ISO 9001 Company. Bhubaneswar / Balasore / Secunderabad / South Andaman / New Delhi. Web : www.smcindia.com , E-Mail : support@smcindia.com

SIVENDRA KUMAR *TUNNEL DESIGNER* | B.R.SHARMA *Sr.CONSULTANT / TUNNEL* | A. A. SAMANT *PROJECT INCHARGE*

RELEASED FOR: ☐ PRELIMINARY FOR APPROVAL ☑ TENDER ☐ CONSTRUCTION

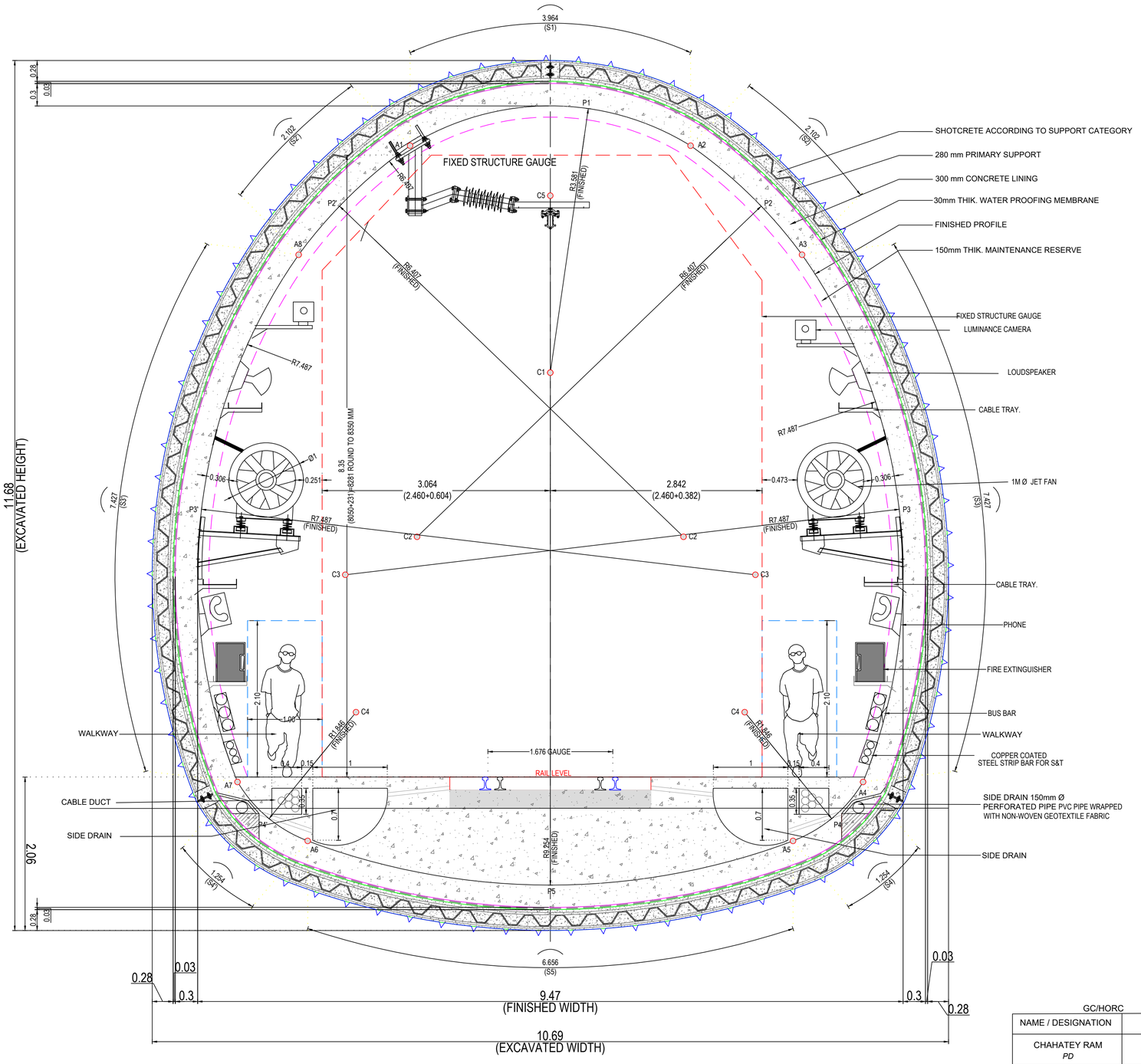

1. ALL DIMENSIONS, NORTHING & EASTING AND LEVELS ARE IN METER, UNLESS OTHERWISE SPECIFIED.
2. NO DIMENSIONS SHALL BE MEASURED FROM DRAWING.
3. TUNNEL EXCAVATED BY HEADING, BENCHING / MULTI DRIFT METHOD (NATM).
4. THE GRADE OF SHOTCRETE WITH SFRS AS PER DETAIL DESIGN.
5. PROPOSED SUPPORT SYSTEM IS BASED ON GIR PROVIDED BY GEOLOGIST. ACTUAL SUPPORT SYSTEM MAY BE REVISED BASED ON ACTUAL RESPONSE OF STRATA DURING EXCAVATION.
6. DRAINAGE PIPE SHALL BE 150mmØ, PERFORATED PVC PIPE WRAPPED WITH NON-WOVEN GEOTEXTILE FABRIC AS PER IS-4989
7. EXCAVATION SEQUENCE WILL BE PROVIDED BASED ON GFC.
8. PIPE ROOFING/FOREPULING OF 114 MM DIA SHALL BE PROVIDED WHERE EVER IT IS REQUIRED.
9. SELF DRILLING ANCHOR OF CAPACITY 190 KN SHALL BE PROVIDED FOR PRIMARY SUPPORT DURING EXCAVATION.
10. LATTICE GIRDER 25-25-32 OF DEPTH 187 MM/ ISMB 200 MM SHALL BE INCASED IN SFRS OF MINIMUM THICKNESS 250 MM.
11. GUARD RAIL SHALL BE PROVIDED THROUGHOUT THE LENGTH OF BALLASTLESS TRACK.
12. BALLASTLESS TRACK TO BE DESIGN FOR 32.5 T AXLE LOADING.
13. DIMENSION OF PRIMARY SUPPORT & CONCRETE ARE TENTATIVE.
14. SEPARATE EARTHING MET CONNECTION FOR S&T SYSTEM SHALL BE PROVIDED.
15. ANCHOR BOLT FOR ROCS SHALL BE INSTALLED DURING TUNNEL LINING.
16. CABLE CROSSING SHALL BE PROVIDED AT EVERY CROSS PASSAGE.
17. LUMINANCE CAMERA, LOUDSPEAKER, JET FAN, PHONE, BUS BAR, COPPER COATED STEEL STRIP BAR FOR S&T AND ROCS WORK (EXCLUDING ANCHOR BOLTS) IS NOT IN THE SCOPE OF WORK OF C-4.

S.N.	CURVE NAME	RADIUS (m.)	START	END	ARCH. LENGTH (m.)
1	S1	R3.581	A1	A2	3.964
2	S2	R6.407	A2	A3	2.102
3	S3	R7.487	A3	A4	7.427
4	S4	R1.846	A4	A5	1.254
5	S5	R9.254	A5	A6	6.656
6	S4	R1.846	A6	A7	1.254
7	S3	R7.487	A7	A8	7.427
8	S2	R6.407	A8	A1	2.102

EXCAVATED AREA	= 101.090 Sqm.
FINISHED AREA	= 71.063 Sqm.
EXCAVATED WIDTH	= 10.690m
EXCAVATED HEIGHT	= 11.680m
FINISHED WIDTH	= 9.470m
FINISHED HEIGHT	= 9.010m

GC/HORC		HRIDC	
NAME / DESIGNATION	SIGN	NAME / DESIGNATION	SIGN
CHAHATEY RAM *PD*		SHIV OM DWIVEDI *CPM/HRIDC*	
SUDHIR AGRAWAL *DPD/CIVIL*		RAJU SOLANKI *DGM/CIVIL/S*	
		AM/S&T	
REETU PATIAL *CDE /CIVIL*			
AMARNATH SINGH *CRE/S&T*		*AM/Civil/Plg.*	
STIPHEN SAHOO *SRE/Elect.*		*JGM/L&U*	

PROJECT:- HARYANA ORBITAL RAIL CORRIDOR

CONNECTING PALWAL TO SONIPAT BYPASSING DELHI AREA BY LINKING ASAOTI-PATLI-SULTANPUR-ASAUDAH BY NEW ELECTRIFIED BG DOUBLE LINE

CLIENT:- HARYANA RAIL INFRASTRUCTURE DEVELOPMENT CORPORATION LIMITED.

GENERAL CONSULTANT: GENERAL CONSULTANT FOR HARYANA ORBITAL RAIL CORRIDOR

RITES Limited in consortium with SMEC International Pty. Ltd.

RITES THE INFRASTRUCTURE PEOPLE | SMEC Member of the Surbana Jurong Group

GC/HORC DRG. NO:- GC-HRIDC-C4-DRW-TTL-CLT-01002_A1

DRAWING NAME: CONCEPTUAL DRAWING FOR SINGLE TRACK TUNNEL CROSS SECTION (SOIL)

ISSUE DATE: 07.11.2022 | REVISED DATE: 03.01.2023

SCALE- AS SHOWN

SMC DRG. NO:- SMC/HRIDC/TUN/CS- 7

CONSULTANT: S.M.C. S.M.C. CONSULTANTS An ISO 9001 Company. Bhubaneswar / Balasore / Secunderabad / South Andaman / New Delhi. Web : www.smcindia.com, E-Mail : support@smcindia.com

SIVENDRA KUMAR	B.R.SHARMA	A. A. SAMANT
TUNNEL DESIGNER	Sr.CONSULTANT / TUNNEL	PROJECT INCHARGE

RELEASED FOR: ☐ PRELIMINARY FOR APPROVAL ☑ TENDER ☐ CONSTRUCTION

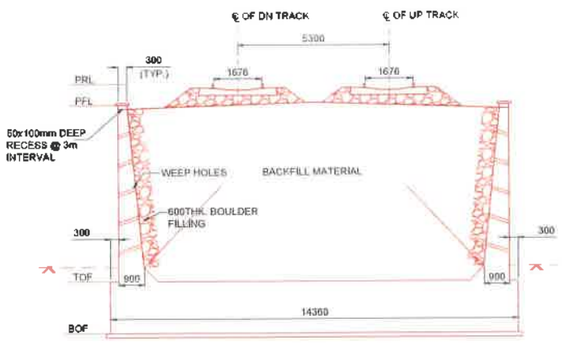

SECTION A-A
SCALE 1:100

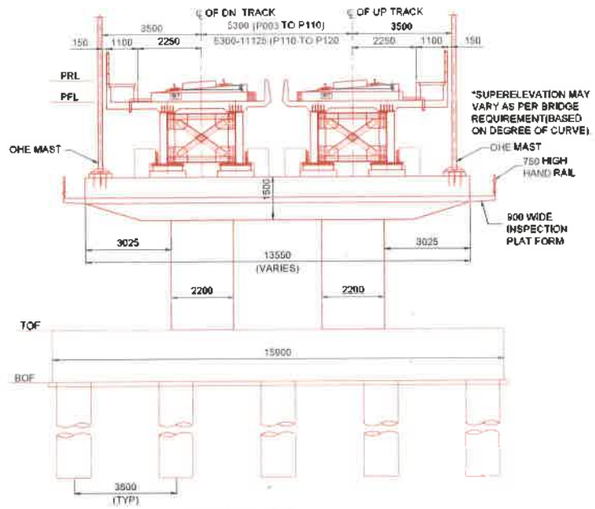

SECTION C-C
SCALE 1:100

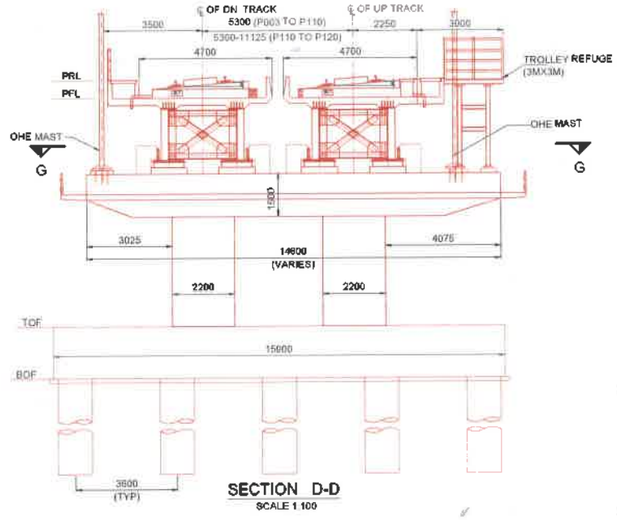

SECTION D-D
SCALE 1:100

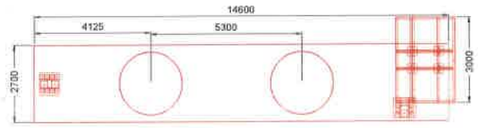

SECTION G-G
SCALE 1:100

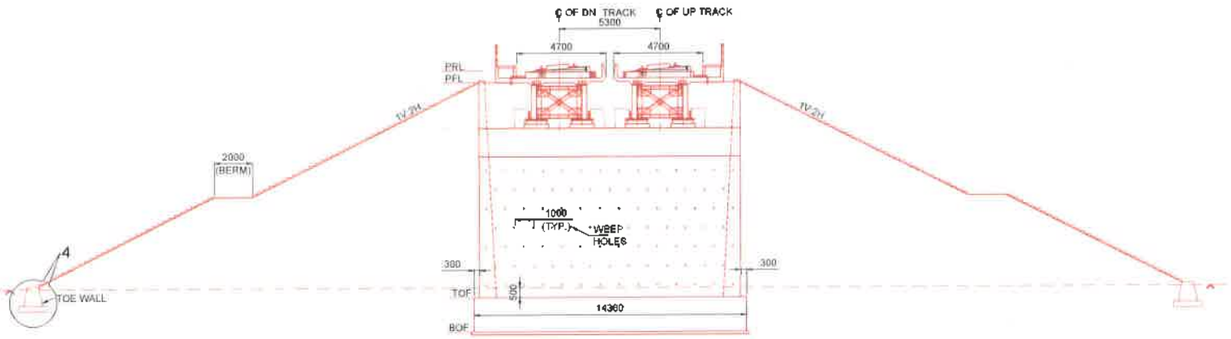

SECTION B-B
SCALE 1:100

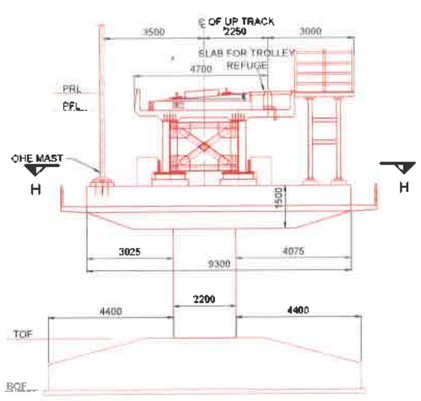

SECTION E-E
SCALE 1:100

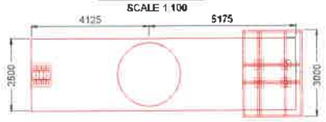

SECTION H-H
SCALE 1:100

DETAIL -4
SCALE 1:50
TOE WALL AND PITCHING

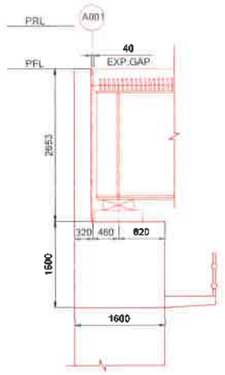

DETAIL -1
SCALE 1:50

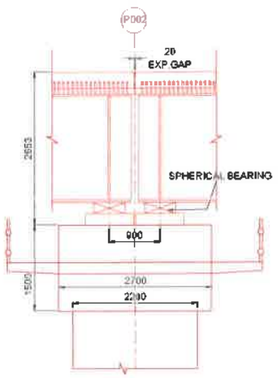

DETAIL -2
SCALE 1:50

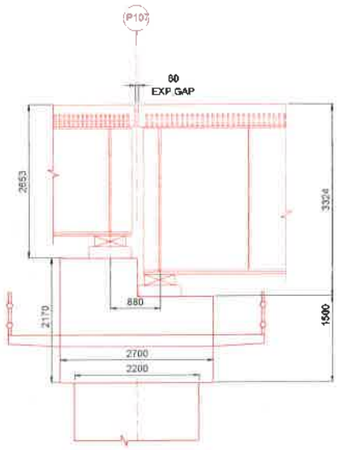

DETAIL -3
SCALE 1:50

GC/HORC		HRIDC	
NAME / DESIGNATION	SIGN	NAME / DESIGNATION	SIGN
CHAHATEY RAM PD	Chahatey Ram 7/7/23	SHIV OM DWIVEDI CPM/SOUTH	
SUDHIR AGRAWAL DPD/CIVIL		RAJU SOLANKI DOM/CIVIL	
RAJENDRA KR. BHAUGUNA DPD/EST	07/07/23		
A.S JANGHU CRE/ELECT.	08.07.2023		
REETU PATIAL CDE/ CIVIL			
PUSHPENDRA KR.SINGH SDE/ CIVIL	P.K. Singh		

NOTES :

A) **GENERAL NOTES**

1. ALL DIMENSIONS ARE IN MILLIMETERS EXCEPT LEVELS WHICH ARE IN METER UNLESS OTHERWISE MENTIONED.
2. NO DIMENSION SHALL BE SCALED FROM THE DRAWING ONLY WRITTEN DIMENSION ARE TO BE FOLLOWED.
3. THIS DRAWING SHALL BE READ IN CONJUNCTION WITH DRAWING NO. GC-HRIDC-C5-DRG-BRD-GAD-01070_A0(1 OF 15).

PROJECT:
HARYANA ORBITAL RAIL CORRIDOR
CONNECTING PALWAL TO SONIPAT BYPASSING DELHI AREA BY LINKING ASAOTI-PATLI-SULTANPUR-ASAUDAH BY NEW ELECTRIFIED BG DOUBLE LINE

CLIENT:
HARYANA RAIL INFRASTRUCTURE DEVELOPMENT CORPORATION LIMITED.

CONSULTANT:
GENERAL CONSULTANT FOR HARYANA ORBITAL RAIL CORRIDOR
RITES Limited in consortium with SMEC International Pty. Ltd.

RITES THE INFRASTRUCTURE PEOPLE | SMEC Member of the Surbana Jurong Group

TITLE:- CONCEPTUAL GENERAL ARRANGEMENT DRAWING FOR VIADUCT BR. NO.70, SPAN: 107X24.4+1X30.5+41x24.4 +1x30+1x12.2 (COMPOSITE GIRDER) FROM CH: 20915.682M TO 24843.543M

DRG. NO.	SHEET NO.
GC-HRIDC-C5-DRG-BRD-GAD-01070_A0	14 OF 15

SCALE :	ISSUE DATE	REVISED DATE
AS SHOWN	05-06-2023	

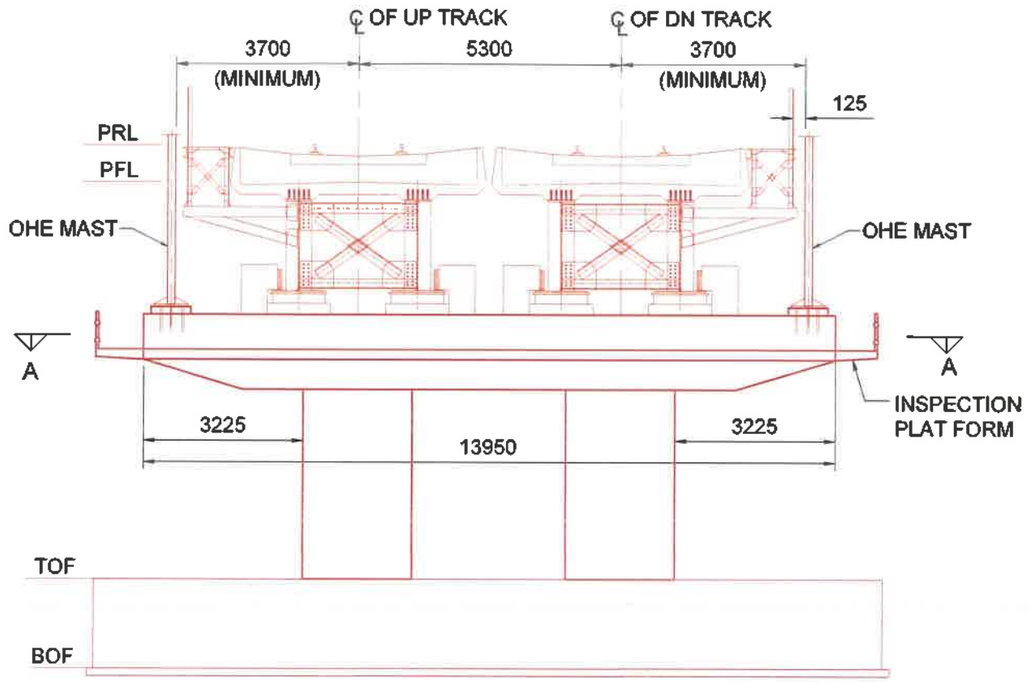

PIER ELEVATION
SCALE 1:150

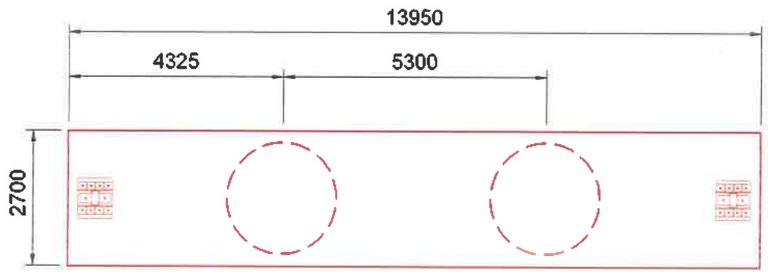

SECTION A-A
SCALE 1:150

NOTES :

1. ALL DIMENSIONS ARE IN MILLIMETERS EXCEPT LEVELS WHICH ARE IN METER, UNLESS OTHERWISE MENTIONED.
2. NO DIMENSION SHALL BE SCALED FROM THE DRAWING ONLY WRITTEN DIMENSION ARE TO BE FOLLOWED.

GC/HORC		HRIDC	
NAME / DESIGNATION	SIGN	NAME / DESIGNATION	SIGN
CHAHATEY RAM PD	Chahatey Ram	VIKRAM YADAV GM A&E/HRIDC	
SUDHIR AGRAWAL DPD/C/IVIL		JYOTI SANGWAN DGM/Elect.	
A.S.JANGHU CRE/ELECT.	10.07.23		
REETU PATIAL CDE/ CIVIL	10/7/23		

PROJECT:
HARYANA ORBITAL RAIL CORRIDOR
CONNECTING PALWAL TO SONIPAT BYPASSING DELHI AREA BY LINKING ASAOTI-PATLI-SULTANPUR-ASAUDAH BY NEW ELECTRIFIED BG DOUBLE LINE

CLIENT:
HARYANA RAIL INFRASTRUCTURE DEVELOPMENT CORPORATION LIMITED.

CONSULTANT:
GENERAL CONSULTANT FOR
HARYANA ORBITAL RAIL CORRIDOR
RITES Limited in consortium with SMEC International Pty. Ltd.

RITES THE INFRASTRUCTURE PEOPLE | SMEC Member of the Surbana Jurong Group

TITLE:- CONCEPTUAL PLAN
LOCATION OF OHE MAST FOR COMPOSITE GIRDER BRIDGES

DRG. NO.	SHEET NO.
GC-HRIDC-SK-GEN-031	1 OF 1

SCALE :	ISSUE DATE
AS SHOWN	10.07.2023

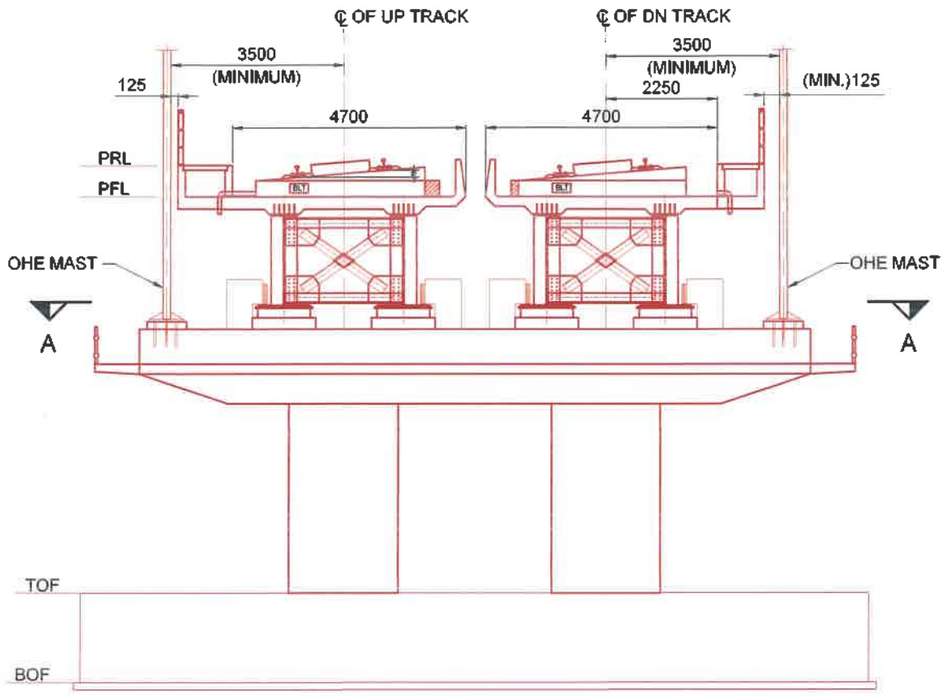

OHE LOCATION FROM CH. 20915 TO 24040

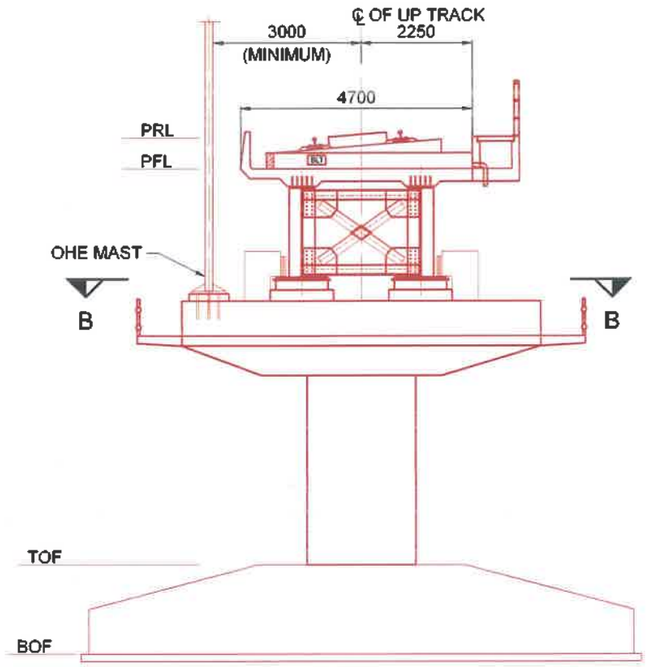

OHE LOCATION FROM CH. 24040 TO 24843

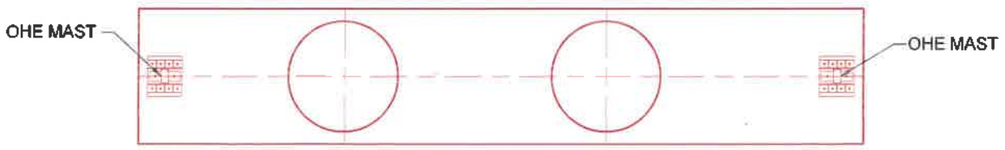

VIEW A-A

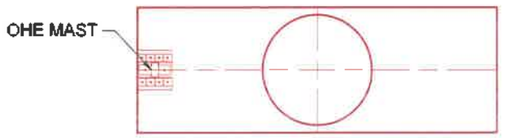

VIEW B-B

GC/HORC		HRIDC	
NAME / DESIGNATION	SIGN	NAME / DESIGNATION	SIGN
CHAHATEY RAM PD		VIKRAM YADAV GM/ A&IE/HRIDC	
SUDHIR AGRAWAL DPD/CIVIL		JYOTI SANGWAN DGM/Elect.	
A.S.JANGHU CRE/ELECT.	11.07.2023		
REETU PATIAL CDE/ CIVIL	11/7/23		

NOTES :

1. ALL DIMENSIONS ARE IN MILLIMETERS EXCEPT LEVELS WHICH ARE IN METER, UNLESS OTHERWISE MENTIONED.
2. NO DIMENSION SHALL BE SCALED FROM THE DRAWING ONLY WRITTEN DIMENSION ARE TO BE FOLLOWED.
3. CHAINAGES SHOWN ARE TENTATIVE AND MAY CHANGE DURING EXECUTION.

PROJECT:
HARYANA ORBITAL RAIL CORRIDOR
CONNECTING PALWAL TO SONIPAT BYPASSING DELHI AREA BY LINKING ASAOTI-PATLI-SULTANPUR-ASAUDAH BY NEW ELECTRIFIED BG DOUBLE LINE

CLIENT:
HARYANA RAIL INFRASTRUCTURE DEVELOPMENT CORPORATION LIMITED

CONSULTANT:
GENERAL CONSULTANT FOR HARYANA ORBITAL RAIL CORRIDOR
RITES Limited in consortium with SMEC International Pty. Ltd.

TITLE:- CONCEPTUAL PLAN
LOCATION OF OHE MAST IN VIADUCT

DRG. NO.	SHEET NO.
GC-HRIDC-SK-GEN-032	1 OF 1

SCALE :	ISSUE DATE
AS SHOWN	10.07.2023

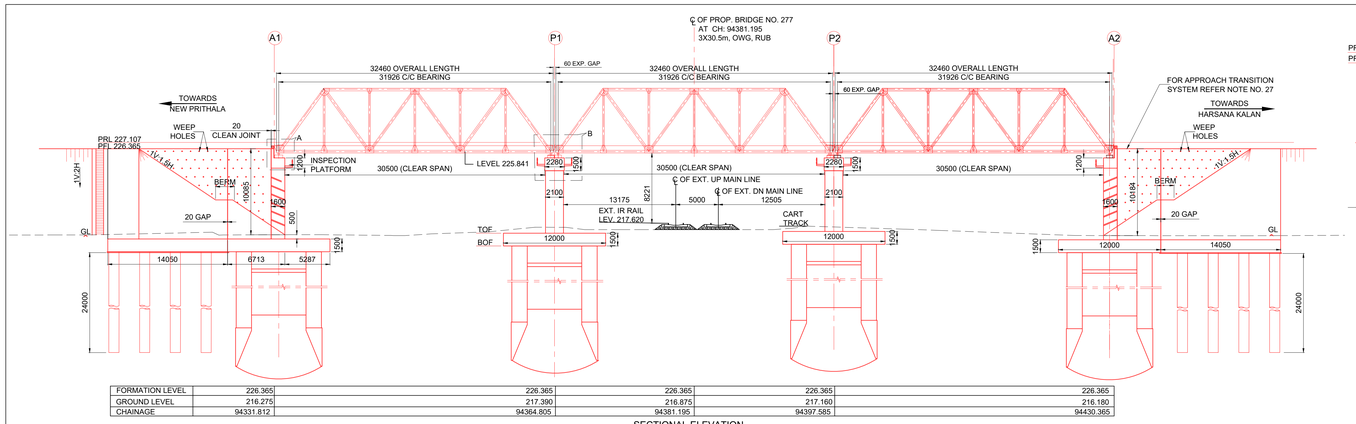

FORMATION LEVEL	226.365	226.365	226.365	226.365	226.365
GROUND LEVEL	216.275	217.390	216.875	217.160	216.180
CHAINAGE	94331.812	94364.805	94381.195	94397.585	94430.365

SECTIONAL ELEVATION
(SCALE 1:250)

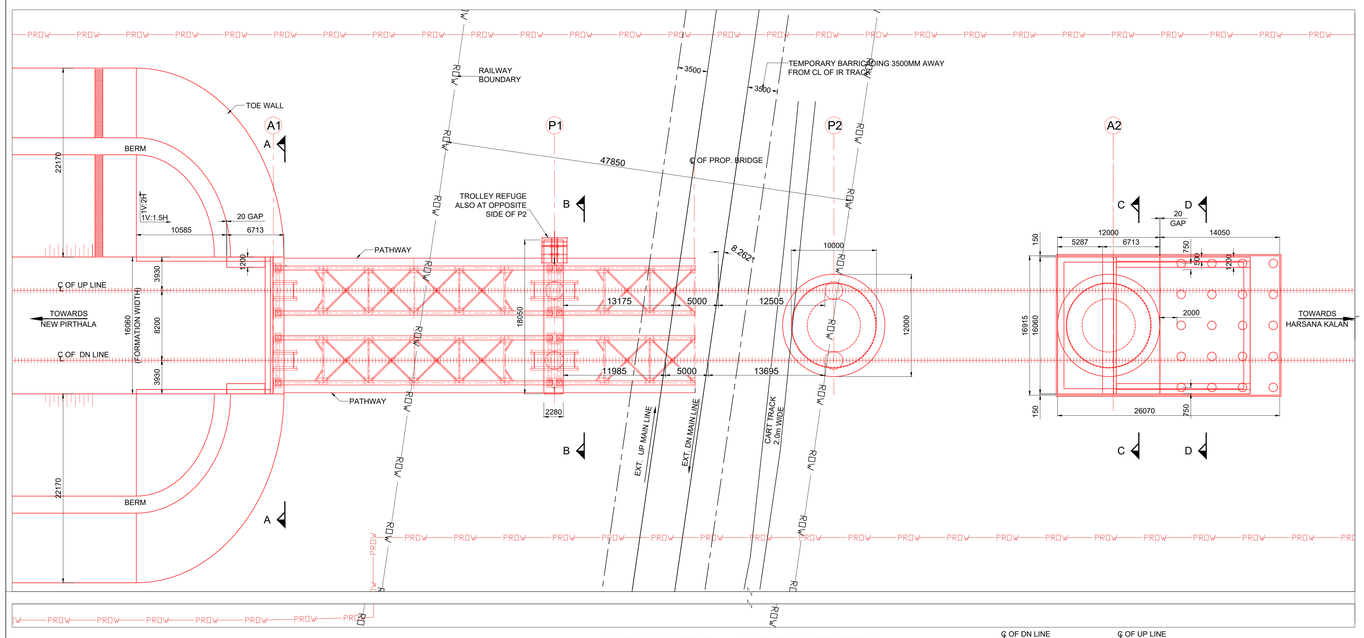

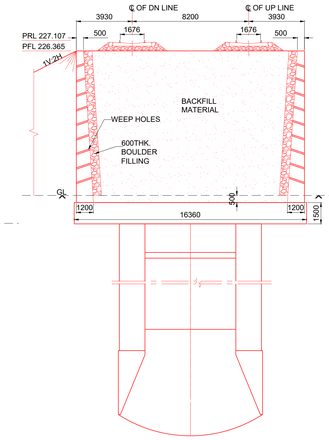

SECTION C-C
SCALE 1:150

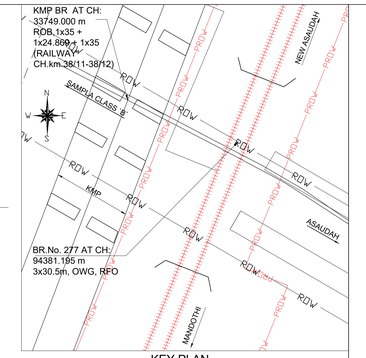

KEY PLAN
SCALE : NTS

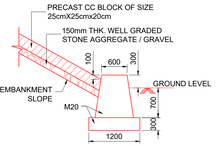

TOE WALL AND PITCHING
SCALE 1:50

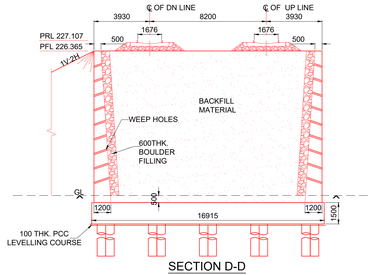

SECTION D-D
SCALE 1:150

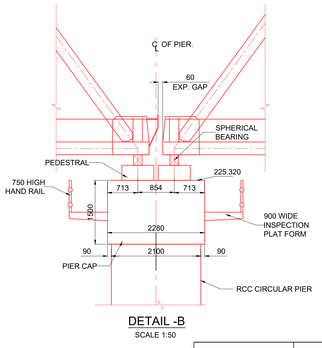

DETAIL -B
SCALE 1:50

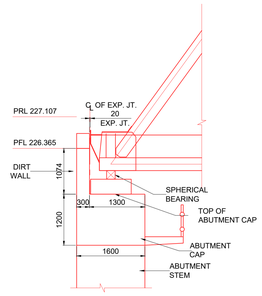

DETAIL -A
SCALE 1:50

NOTES:

1. ALL DIMENSIONS ARE IN MILLIMETERS AND LEVELS ARE IN METER
2. DIMENSIONS ARE NOT TO BE SCALED ONLY WRITTEN DIMENSIONS TO BE FOLLOWED
3. DESIGN CRITERIA
   i) IRS BRIDGE SUBSTRUCTURE AND FOUNDATION CODE 2013.
   ii) IRS CONCRETE BRIDGE CODE 2014.
   iii) IRS BRIDGE RULES 2014.
   iv) IS 2911 PART-1 SECTION-2.
   v) EXPOSURE CONDITION - MODERATE.
   vi) SEISMIC ZONE - IV
   vii) STANDARD OF LOADING :- SUPER STRUCTURE-32.5T (RDSO STANDARD OWG) AND SUB STRUCTURE-32.5T- 2008 LOADING.
4. THE STRUCTURAL DIMENSIONS AND SIZES ARE INDICATIVE AND THESE MAY VARY DURING DETAIL DESIGN.
5. TYPE OF FOUNDATION SHALL BE DEEP FOUNDATION. NO.OF PILES, SIZE OF WELL & SUBSTRUCTURE SHOWN IS TENTATIVE AND MAY CHANGE DURING DETAILED DESIGN.
6. ALL RCC AND CC WORKS SHALL BE DONE IN ACCORDANCE WITH SPECIFICATION LAID DOWN IN IRS CONCRETE BRIDGE CODE.
7. THE GRADE OF CONCRETE
   i) FOR ABUTMENT,DIRT & RETURN WALL----------M35
   ii) FOR FOUNDATION ----------M35
   iii) FOR LEVELING COURSE----------M20
8. ALL CONCRETE WORK SHALL BE MECHANICALLY MIXED AND VIBRATED.
9. MIX DESIGN SHALL BE APPROVED BY ENGINEER - IN CHARGE.
10. HIGH YIELD STRENGTH DEFORMED BARS OF GRADE Fe-500D CONFORMING TO IS: 1786-2008 SHALL BE USED AS REINFORCEMENT.
11. BED LEVEL & ROAD LEVEL,FORMATION LEVEL AND RAIL LEVEL & ALIGNMENT SHALL BE VERIFIED BY THE ENGINEER AT SITE BEFORE EXECUTION OF WORK.
12. ANGLE OF INTERNAL FRICTION OF BACK FILL SHALL NOT BE LESS THAN 33°.
13. PROTECTION WORK ON SLOPES OF BANK UP TO 30M,BOTH SIDES ON APPROACHES OF BRIDGE SHALL BE DONE AS PER SKETCH NO. GC-HRIDC-SK-GEN-015.
14. ALL RCC SURFACES COMING IN CONTACT WITH SOIL SHOULD BE PAINTED WITH BITUMEN OR COAL TAR OF APPROVED QUALITY @ 1.464 KG/SQM.
15. CURING SHALL BE DONE AS PER CLAUSE NO 8.4 OF IRS CONCRETE BRIDGE CODE.
16. SAFETY & PROTECTION OF THE PROPOSED WORK IS TO BE ENSURED BY THE CONTRACTOR AS PER PARA 826 OF IRPWM WITH UPDATED CORRECTION SLIPS OF 2011-12.
17. THE SPECIFICATIONS FOR THE OPEN WEB GIRDER SHALL BE IN ACCORDANCE WITH RDSO DRG.NO'S : RDSO B-17061 TO 17078
18. CONCRETING SHALL BE DONE IN ACCORDANCE WITH IRS CONCRETE BRIDGE CODE WITH 20MM MAXIMUM SIZE AGGREGATE.
19. ALL DIMENSIONS AND LEVELS SHOULD BE VERIFIED AT SITE BEFORE EXECUTION.
20. BRIDGE DETAILS LIKE , DL, INSPECTION STEPS PAINTINGS ETC SHOULD BE FOLLOWED AS PER BRIDGE MANUAL, DURING CONSTRUCTION.
21. THIS DRAWING IS PROPERTY OF HARYANA RAIL INFRASTRUCTURE DEVELOPMENT CORPORATION LIMITED (HRIDC) AND EXCLUSIVE USE OF HRIDC.
22. ARRANGEMENT FOR PATHWAY SHALL BE PROVIDED AS PER RDSO DWG. NO. CBS-0045(FOR OWG) & CBS-0046 (FOR CG).
23. TROLLEY REFUGE SHALL BE PROVIDED ON OPPOSITE SIDES OF EACH CENTRAL PIER.
24. SEISMIC ARRESTOR SHALL BE PROVIDED ON THE PIER/ABUTMENT CAP.
25. INSPECTION STEPS SHALL BE PROVIDED AT DIAGONALLY OPPOSITE ENDS OF THE BRIDGE AFTER PROTECTION WORK.
26. PROVISION FOR OHE MAST SHALL BE KEPT ON PIER CAP AS PER REQUIREMENT.
27. TRANSITION SYSTEM TO BE ADOPTED ON BRIDGE APPROACHES SHALL BE AS PER RDSO REPORT NO. GE:R-50(TRANSITION SYSTEM ON APPROACHES OF BRIDGES). FOR DETAILS REFER SKETCH NO. GC-HRIDC-SK-GEN-019.
28. SEPERATE LAUNCHING SCHEME SHALL BE GOT APPROVED FROM DIVISION & HQ. OFFICE BY HRIDC.
29. CRS SANCTION SHALL BE OBTAINED BEFORE COMMENCEMENT OF WORK & LAUNCING OF GIRDER.
30. (TRO) OHE MODIFICATION WORK WILL BE REQUIRED. ESTIMATE FOR SAME SHALL BE SUBMITTED SHORTLY.
31. NO ACTIVITY SHALL BE DONE INSIDE THE BARRICADING LINE WITHOUT TRAFFIC CUM POWER BLOCK OF IR TRACKS.

HALF PLAN AT TOP HALF PLAN AT BOTTOM
SCALE 1 : 250

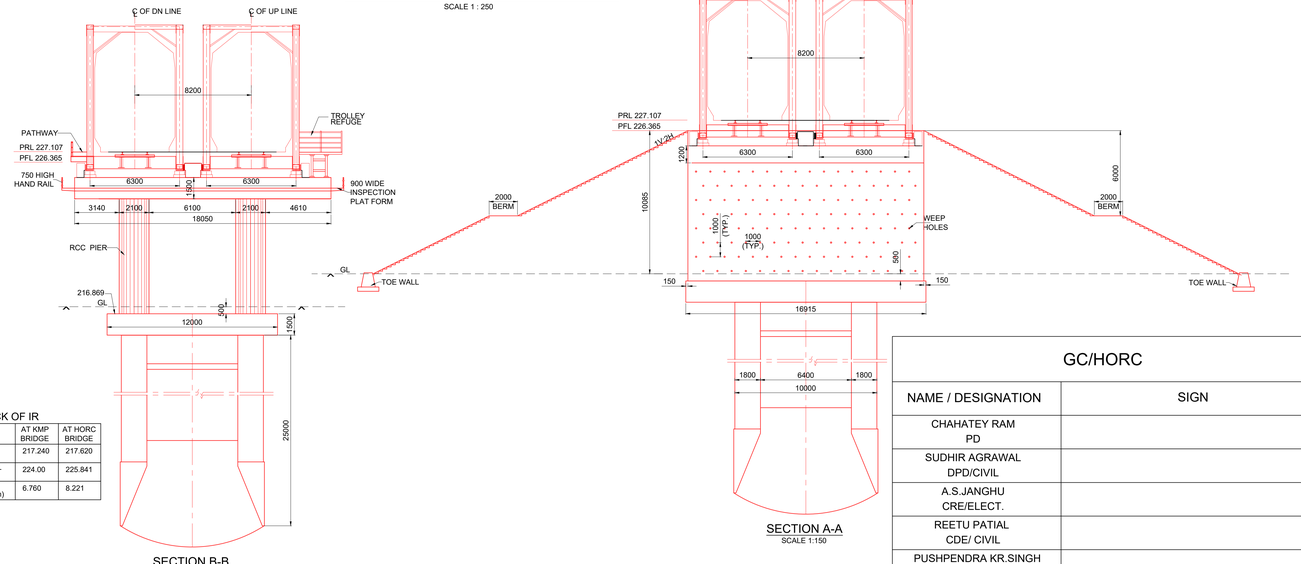

SECTION B-B
SCALE 1:150

SECTION A-A
SCALE 1:150

DESCRIPTION OF PROPOSED BRIDGE

S.NO.	ITEM	
1	CHAINAGE (m)	94381.195
2	RAIL LEVEL (m)	227.634
3	FORMATION LEVEL (m)	226.892
4	SKEW ANGLE	8.262°
5	CLEAR SPAN (m)	30.5
6	TYPE OF CROSSING	IR TRACK

LEGEND

PRL	PROPOSED RAIL LEVEL
PFL	PROPOSED FORMATION LEVEL
RD.L	ROAD LEVEL
TOF	TOP OF FOUNDATION
BOF	BOTTOM OF FOUNDATION
THK.	THICKNESS
EXP. JT.	EXPANSION JOINT
C.C	CEMENT CONCRETE
TYP.	TYPICAL
G.L	GROUND LEVEL
PROW	PROPOSED HORC'S ROW
ROW	INDIAN RAILWAY ROW

CONSTRUCTION DEPTH
ON OPEN WEB GIRDER

1) RAIL (60kg)	172 mm
2) BEARING PAD	10 mm
3) GROOVED BEARING PLATE	19 mm
4) H-BEAM SLEEPER	200 mm
5) PACKING PLATE BELOW SLEEPER	6 mm
6) ELASTOMERIC PAD	25 mm
TOTAL	432 mm

EXISTING TRACK OF IR

S.NO.	ITEM	AT KMP BRIDGE	AT HORC BRIDGE
1	RAIL LEVEL (m)	217.240	217.620
2	SOFFIT LEVEL (m)	224.00	225.841
3	VERTICAL CLEARANCE(m)	6.760	8.221

COLOR CODE LEGEND:
RED ——— - PROPOSED
BLACK ——— - EXISTING

	NORTHERN RAILWAY
DRM-DLI	
ADRM-INFRA-DLI	
SRDEN-CO-DLI	
SRDOM-DLI	
SRDSTE-DLI	
SRDEE-TRD-DLI	
SRDEN-4-DLI	
ADEN-DEE	
SSE-PWAY-GGN	
SSE-W-GGN	
NR.DIVL FILE NO.	
NR.DIVL PLAN NO.	
NRHQ CASE NO.	
NRHQ PLAN NO.	

GC/HORC		HRIDC	
NAME / DESIGNATION	SIGN	NAME / DESIGNATION	SIGN
CHAHATEY RAM PD		VISHAL GUPTA CPM/NORTH	
SUDHIR AGRAWAL DPD/CIVIL		DGM/C	
A.S.JANGHU CRE/ELECT.			
REETU PATIAL CDE/ CIVIL			
PUSHPENDRA KR.SINGH SDE/ CIVIL			

PROJECT:
HARYANA ORBITAL RAIL CORRIDOR
CONNECTING PALWAL TO SONIPAT BYPASSING DELHI AREA BY LINKING ASAOTI-PATLI-SULTANPUR-ASAUDAH BY NEW ELECTRIFIED BG DOUBLE LINE

CLIENT:
HARYANA RAIL INFRASTRUCTURE DEVELOPMENT CORPORATION LIMITED.

CONSULTANT:
GENERAL CONSULTANT FOR
HARYANA ORBITAL RAIL CORRIDOR
RITES Limited in consortium with SMEC International Pty. Ltd.
RITES THE INFRASTRUCTURE PEOPLE
SMEC BUILDING A BETTER WORLD

TITLE:- GENERAL ARRANGEMENT DRAWING
PROPOSED MAJOR BRIDGE (RFO) NO. 277
AT CH: 94381.195m 3x30.5m OPEN WEB GIRDER
(CROSSING RAILWAY ON DELHI - ROHTAK SECTION)

DRG. NO.	SHEET NO.
GC-HRIDC-C6-DRW-BRD-GAD-01277_A0	1 OF 1

SCALE :	ISSUE DATE	REVISED DATE
AS SHOWN	12-07-2023	

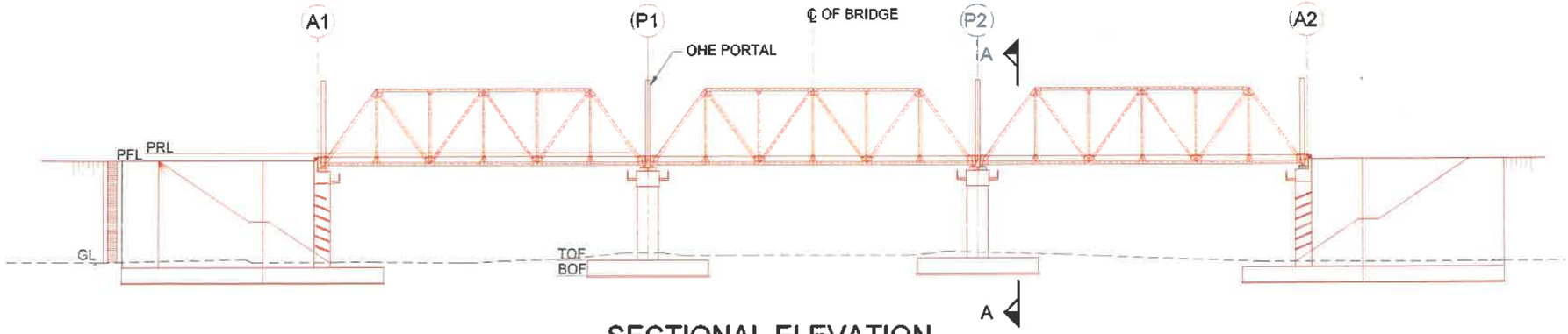

SECTIONAL ELEVATION

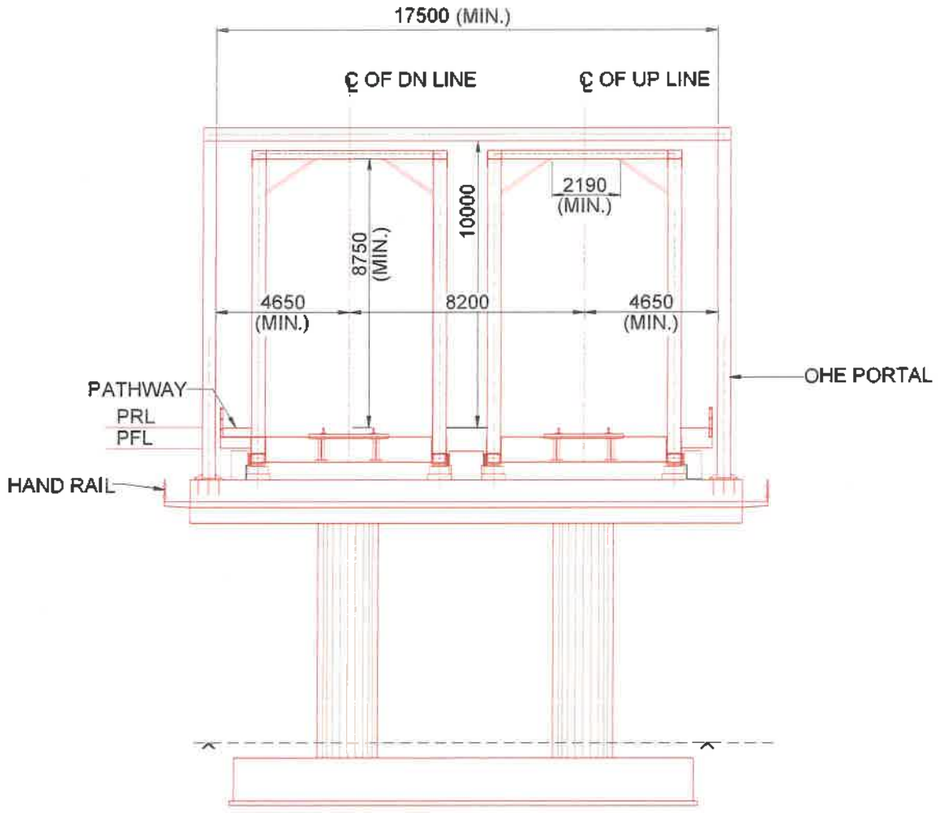

SECTION A-A

NOTES :

1. ALL DIMENSIONS ARE IN MILLIMETERS EXCEPT LEVELS WHICH ARE IN METER, UNLESS OTHERWISE MENTIONED.
2. NO DIMENSION SHALL BE SCALED FROM THE DRAWING ONLY WRITTEN DIMENSION ARE TO BE FOLLOWED.

GC/HORC		HRIDC	
NAME / DESIGNATION	SIGN	NAME / DESIGNATION	SIGN
CHAHATEY RAM PD	Chahatey Ram	VIKRAM YADAV GM/ A&IE/HRIDC	
SUDHIR AGRAWAL DPD/CIVIL		JYOTI SANGWAN DGM/Elect.	
A.S JANGHU CRE/ELECT.	18.07.23		
REETU PATIAL CDE/ CIVIL	Reetu		

PROJECT:
HARYANA ORBITAL RAIL CORRIDOR
CONNECTING PALWAL TO SONIPAT BYPASSING DELHI AREA BY LINKING ASAOTI-PATLI-SULTANPUR-ASAUDAH BY NEW ELECTRIFIED BG DOUBLE LINE

CLIENT:
HARYANA RAIL INFRASTRUCTURE DEVELOPMENT CORPORATION LIMITED.

CONSULTANT:
GENERAL CONSULTANT FOR HARYANA ORBITAL RAIL CORRIDOR
RITES Limited in consortium with SMEC International Pty. Ltd.

RITES THE INFRASTRUCTURE PEOPLE | SMEC Member of the Surbana Jurong Group

TITLE:- CONCEPTUAL PLAN
OHE PORTAL FOR OWG GIRDER

DRG. NO.	SHEET NO.
GC-HRIDC-SK-GEN-035	1 OF 1

SCALE :	ISSUE DATE
AS SHOWN	18.07.2023